User's Guide

C2AVS111101M6

Pages					Pages
2 to 10	Main Screen	1	7	Target List	36
11 to 21	Static Pressure	2	8	Bird Count	37 to 49
22	Heat & Brood	3	9	Light & Clock Outputs	50 to 58
23 to 28	Sidewall Fans	4	10	History	59 to 63
29 to 32	Tunnel Fans	5	11	Alarm	64 to 67
33 to 35	Evap Cool/Fog	6	12	Miscellaneous	68 to 85
86 to 92	Annex				
93 to 96	Wiring Diagram				
97	Electrician's Notes				

SCREEN 1 **MAIN SCREEN**

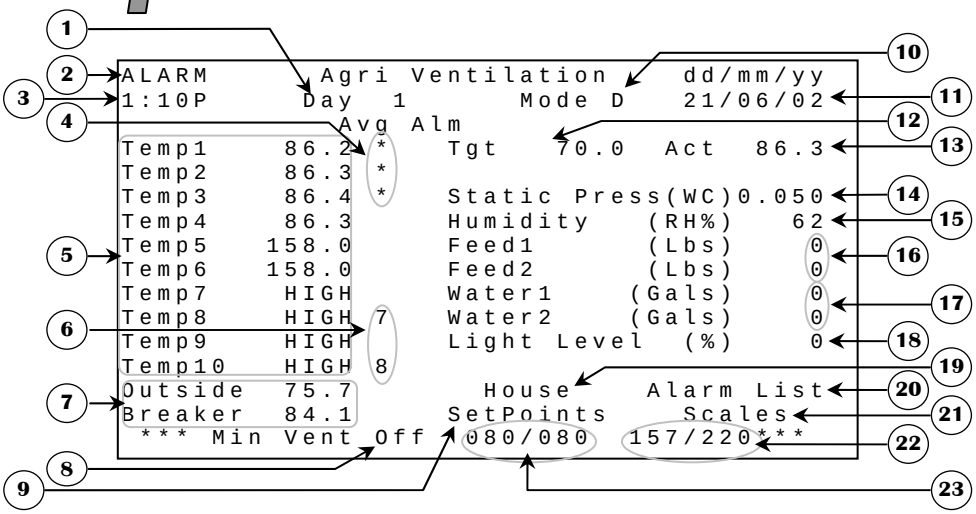

1. This parameter displays the actual ramping day even if `RAMPING FUNCTION` is set to OFF. It shows the same value as the `RAMPING STARTDAY` parameter in the **SETPOINTS (1.2)** screen. This parameter is incremented by one each time the clock passes midnight and may display any value from OFF, day 0 to day 365.

2. This parameter appears on every screen to indicate the current alarm situation. Refer to **ALARM LIST (11.1)** screen to find out which alarm(s) is currently in effect. The messages displayed at this parameter may be "`ALARM`", indicating the alarm relay is activated, "`ALARM`", indicating an alarm situation occurred but is now corrected, "`WARNING`", indicating a minor problem has occurred, or "`SILENCE`", indicating the alarm has been silenced for a five minute period.

3. This parameter displays the actual time of day in AM/PM format. This time of day can be changed in the **DATE-CLOCK-PASSWORD (12.3)** screen with the `ADJUST CLOCK` parameter.

4. This column indicates which sensor is used to calculate the actual average temperature. Each sensor used for the average will be marked with a "*".

5. These parameters display the sensor readings available in the control. There is a possibility of 12 inside sensors if no outside or breaker sensors are used. If there are only 4 inside probes selected in the `INSIDE PROBES` parameter in the **SYSTEM CONFIGURATION (12.5)** screen, only the first 4 inside probes will be shown. The range of these sensor readings goes from -58.0°F to 140.0°F.

6. This parameter column indicates the backup sensor used for the respective inside sensor that is defective. The backup sensor will not be shown until this sensor is considered defective, otherwise a "*" will appear if the respective probe is included in the alarm.

7. These sensors have a feature more than the other inside probes. Sensor 11 can also be used as "Outside" sensor if the `OUTSIDE PROBE` is set to "Y" in the **SYSTEM CONFIGURATION (12.5)** screen. Sensor 12 can also be used as "Outside" if `OUTSIDE PROBE` is set to "Y". Sensor 12 can also be used as "Breaker" temp if `BREAKER PROBE` is set to "Y". The range of these sensor readings goes from -58.0°F to 140.0°F.

8. This parameter displays the actual state of the minimum ventilation timer.

9. This parameter is used to access the **SETPOINTS (1.2)** screen.

10. This parameter displays the current mode the control is in. There are 10 different modes including the default mode. For more explanations on this feature, refer to the **MODES (12.1)** screen.

11. This parameter displays the current date and its format. Both values (date and format) can be changed in the **DATE-CLOCK-PASSWORD (12.3)** screen with the `ADJUST DATE` and `ADJUST FORMAT` parameters.

12. This parameter displays the actual target temperature, which can be changed in the **SETPOINTS (1.2)** screen.

13. This parameter displays the actual average temperature calculated with inside sensors selected in `AVERAGE TEMP` of the **PROBE CONFIGURATION (12.2)** screen.

14. This parameter displays the actual reading of the static pressure sensor. The range of this sensor goes from 0.000"WC to 0.200"WC.

15. This parameter displays the actual reading of the humidity sensor. If the humidity sensor is defective, this parameter will display "`ERR`" The range of this sensor goes from 0 RH% to 100 RH%.

16. This parameter displays the total amount of feed in pounds (lbs) distributed by the respective feeder since last midnight. This amount is incremented each time a pound of food is distributed depending on the `FEED (1-2) CALIBRATION (LBS/MIN)` parameter in the **SENSOR CALIBRATION (12.4)** screen.

17. This parameter displays the number of gallons that have been accumulated since last midnight by the respective water counter. The number of gallons counted with each pulse can be set with the `WATER (1-2) (GAL/PULSE)` parameter in the **SENSOR CALIBRATION (12.4)** screen.

18. This parameter displays the luminosity percentage of the light logic. This parameter will not be shown if no variable lights or ON/OFF lights are used (`LIGHTS` is set to 0 in **OUTPUT CONFIGURATION (12.6)** screen and `LIGHT DIMMER` is set to "N" in **SYSTEM CONFIGURATION (12.5)** screen). If "ADJ." is displayed here, this means that light activity is suspended for adjustments by the `AUTO/ADJUST` parameter in **LIGHT RAMPING (9.1)** screen. This parameter can also display an ON/OFF light status if only a light relay is used. This parameter is displayed to the nearest 1% from 0% to 100%.

19. This parameter is used to access the **HOUSE (1.1)** screen.

20. This parameter is used to access the **ALARM LIST (11.1)** screen.

21. This parameter is used to access the **ACTUAL CONDITIONS - SCALES (1.3)** screen.

22. These parameters display the minimum ventilation timer OFF time countdown and period. Minimum ventilation timer settings are adjustable in the **MIN VENT TIMER & RAMPING (4.1)** screen. Minimum ventilation timer settings are updated at the end of an ON or OFF portion.

23. These parameters display the minimum ventilation timer ON time countdown and period. Minimum ventilation timer settings are adjustable in the **MIN VENT TIMER & RAMPING (4.1)** screen. Minimum ventilation timer settings are updated at the end of an ON or OFF portion.

SUB SCREEN 1.1 **HOUSE**

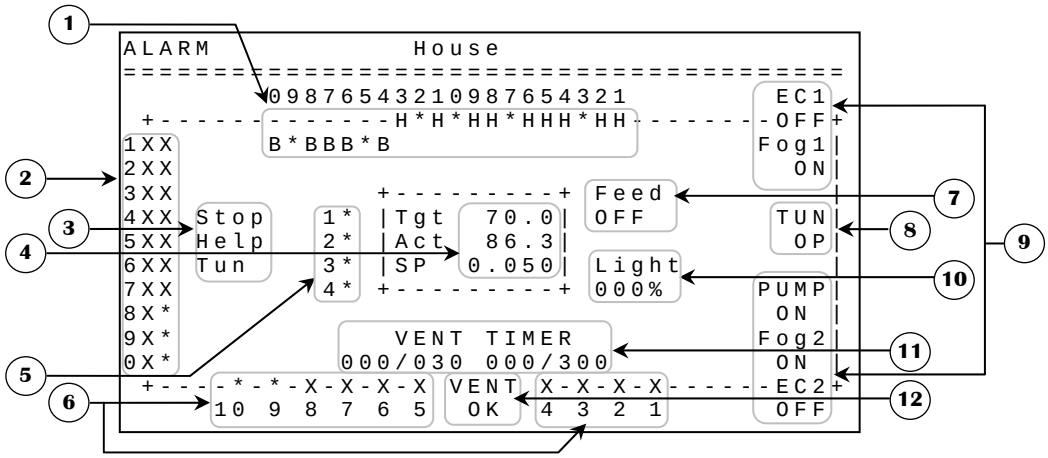

Note: It is possible to access a specific output screen from this sub screen by positioning the cursor on the desired output and pressing SELECT.

If an output number or name and its state are not shown, there is no relay associated to this respective output in the **OUTPUT CONFIGURATION (12.6)** screen. Otherwise output numbering and actual state are always shown.

1. These parameters display the actual state of up to 20 possible heaters/brooders. Their state can be displayed with two different values, used and running (marked with “H” for heaters or “B” for brooders) and used and not running (marked with “*”).

2. These parameters display the actual state of up to 20 possible tunnel fans. Their state can be displayed with two different values, used and running (marked with “X”) and used but not running (marked with “*”).

3. These parameters are used to display if any of the tunnel fan transitions of the **TUNNEL FANS (5)** screen are in effect.

4. These parameters are used as readout and reference box only. The first parameter (“Tgt”) displays the actual target temperature. The second parameter (“Act”) displays the actual average temperature and the last parameter (“SP”) displays the actual reading of the static pressure sensor.

5. These parameters display the actual state of the four possible stir fans. Their state can be displayed with two different values, used and running (marked with “X”) and used but not running (marked with “*”).

6. These parameters display the actual state of up to 10 possible sidewall fans. Their state can be displayed with two different values, used and running (marked with “X”) and used but not running (marked with “*”).

7. This parameter displays the actual state of the feeder. Its state can be displayed with two different values, used and currently active (marked with “ON”) and used and not currently active (marked with “OFF”).

8. This parameter displays the actual state of the tunnel inlet. Its state can be displayed with three different values, used and opening (marked with “OP”), used and closing (marked with “CL”) and used but not moving (marked with “OK”).

9. These parameters display the actual state of the two possible evaporation-cooling cells, the two possible foggers and the pump output. Their state can be displayed with two different values, used and running (marked with “ON”) and used but not running (marked with “OFF”).

10. This parameter displays the luminosity percentage of the light output. If the light and its state are not shown, there is no relay associated to this output in the **OUTPUT CONFIGURATION (12.6)** screen and `LIGHT DIMMER` option is set to “N” in the **SYSTEM CONFIGURATION (12.5)** screen. If “ADJ.” is displayed here, this means that light activity is suspended for adjustments by the `SUSPEND` parameter in **LIGHT RAMPING (9.1)** screen. Otherwise, light and its actual state are always shown and its state is displayed to the nearest 1% from 0% to 100%. This parameter can also display an ON/OFF light status if no variable lights are used and the light logic is used.

11. These parameters display the minimum ventilation timer ON and OFF time countdowns and periods. Minimum ventilation timer settings are adjustable in the **MIN VENT TIMER & RAMPING (4.1)** screen. Minimum ventilation timer settings are updated at the end of an ON or OFF portion.

12. This parameter displays the actual state of the ventilation inlet. Its state can be displayed with three different values, used and opening (marked with “OP”), used and closing (marked with “CL”) and used but not moving (marked with “OK”).

SUB SCREEN 1.2 **SETPOINTS**

```
ALARM        Set Point & Ramping
Target Temp   88.8      Actual Temp   86.3
=========================================
Growing Day    5 Ramping Start Day   (365)
Ramping Function                     ( ON)
MSP Drop Time   ON ( 4:30A)   OFF ( 8:27A)
MSP Drop Temp                        ( 5.0)
MSP Raise Rate                    ( 60) MIN
     1   2   3    4    5    6    7    8    9   10
Day  0   3   7   14   21   28   35   42   35   42
MSP 88  88  85   80   78   76   74   72   35   42

   11  12  13   14   15   16   17   18   19   20
   63  70  77   84   91   98   98   98   98   98
   72  70  68   68   68   68   68   68   68   68
```

1. This parameter is used to set the temperature goal and it is also the reference temperature for all relative settings. This parameter can follow a ramping curve function and cannot be modified if `RAMPING FUNCTION` is set to ON and `RAMPING STARTDAY` is not set to OFF. The value of this parameter is adjusted in 0.1°F increments from 32.0°F to 120.0°F.

2. This parameter displays the growth day, which is incremented (if not set to OFF) each time the clock passes midnight. The value displayed can be OFF, day 0 to day 365.

3. This parameter is used to set the ramping curve function ON or OFF. If this parameter is set to ON and `RAMPING STARTDAY` is not set to OFF, `TARGET TEMP` will follow the curve function and user will not be able to modify it nor the `DAY` points and `MSP` points.

4. This parameter is used to set the time at which the `MSP` will start to drop. When the time of day reaches this value, the effective MSP will decrease by 1.0°F per minute until it has dropped by `MSP DROP TEMP`. The effective MSP will remain at `MSP - MSP DROP TEMP` until the time of day reaches `MSP DROP TIME OFF`. This parameter can be adjusted to any value from 12:00A to 11:59P.

5. This parameter is used to set the maximum value that will be subtracted from the adjusted `MSP` during the MSP drop period. When the time of day reaches `MSP DROP TIME ON`, the effective MSP will decrease by 1.0°F per minute until it has dropped by the value adjusted here. If this value is set to OFF, the MSP drop function will be deactivated. This parameter is adjusted in 0.1°F increments from OFF, 0.1°F to 10.0°F.

6. This parameter is used to set the time effective MSP will take to go from `MSP - MSP DROP TEMP` to `MSP`. When the time of day reaches `MSP DROP TIME OFF`, the effective MSP will start modulate from `MSP - MSP DROP TEMP` to `MSP` throughout this amount of time. This parameter is adjusted in 1-minute increments from 1 minute to 300 minutes.

7. These parameters are used to set the days used in the ramping curve function. These parameters are adjusted in 1-day increments from day 0 to day 99 for the first three points and from day 0 to day 365 for the other points.

8. These parameters are used to set the temperatures relative to the day in ramping functions. These parameters are adjusted in 1°F from 32°F to 99°F.

9. This parameter displays the actual average temperature calculated with inside sensors selected in `AVERAGE TEMP` in the **PROBE CONFIGURATION (12.2)** screen.

10. This parameter allows the user to adjust the ramping day, which is used for all ramping functions. The `RAMPING STARTDAY` is incremented by 1 from OFF, day 0 to day 365.

11. This parameter is used to set the time at which the `MSP` will start to rise after having dropped. When the time of day reaches this value, the effective MSP will start modulate towards `MSP` throughout the `MSP RAISE RATE`. This parameter can be adjusted to any value from 12:00A to 11:59P.

SUB SCREEN 1.3 ACTUAL CONDITIONS - SCALES

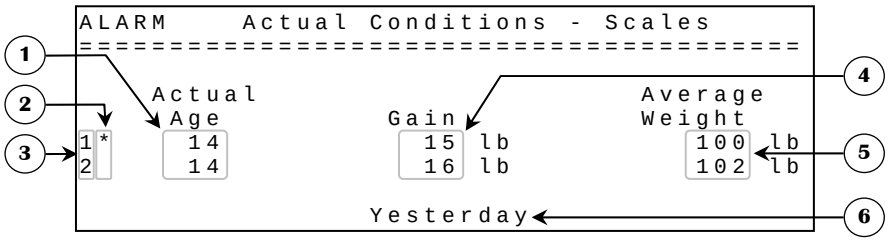

1. These parameters display the actual age of the respective flock. If a flock has not been started, the corresponding parameter will display "--". These values are incremented each time the actual date changes. The actual age is displayed from day 0 to 500.

2. These parameters appear to indicate a communication problem with the corresponding scale. When a scale has not communicated with the control for five minutes, a star will blink next to the corresponding reference number. It is also possible to access the **ALARM LIST (11.1)** screen by pressing SELECT button while the cursor is positioned on one of these parameters.

3. These parameters are the reference numbers that are used to associate the data to the scale number on the same line. They may also be used to access the **SCALE X – ACTUAL INFORMATION (8.3-4.1)** screen of the respective scale by pressing SELECT button when the cursor is positioned on one of these parameters.

4. These parameters display the weight gained during the actual day. The gained weight is the difference between today's average weight and yesterday's average weight. If a scale has not recorded an average weight during the actual day or the preceding one, the gain cannot be calculated and the respective parameter will display "---". The gain values are displayed from -9.998 to 9.999 pounds.

5. These parameters display the average weight of the respective scale recorded for the actual day. If a scale has not recorded an average weight during the actual day, the respective parameter will display "---". The average weight values are displayed from 0.001 to 9.999 pounds.

6. This parameter is used to access the **YESTERDAY'S RESULTS - SCALES (1.4)** screen.

SUB SCREEN 1.4 YESTERDAY'S RESULTS - SCALES

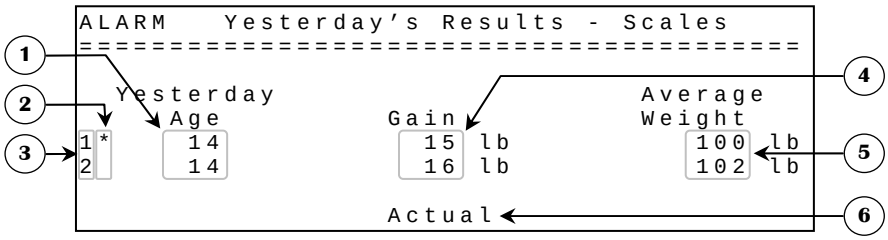

1. These parameters display the age the respective flock had yesterday. If a flock has not been started, the corresponding parameter will display "--". These values are incremented each time the actual date changes. The yesterday's age is displayed from day 0 to 500.

2. These parameters appear to indicate a communication problem with the corresponding scale. When a scale has not communicated with the control for five minutes, a star will blink next to the corresponding reference number. It is also possible to access the **ALARM LIST (11.1)** screen by pressing SELECT button while the cursor is positioned on one of these parameters.

3. These parameters are the reference numbers that are used to associate the data to the scale number on the same line. They may also be used to access the **SCALE X – ACTUAL INFORMATION (8.3-4.1)** screen of the respective scale by pressing SELECT button when the cursor is positioned on one of these parameters.

4. These parameters display the weight gained yesterday. The gained weight is the difference between yesterday's average weight and the preceding average weight. If a scale has not recorded an average weight during the yesterday's day or the preceding one, the gain cannot be calculated and the respective parameter will display "---". The gain values are displayed from -9.998 to 9.999 pounds.

5. These parameters display the average weight of the respective scale recorded yesterday. If a scale has not recorded an average weight during the yesterday's day, the respective parameter will display "---". The average weight values are displayed from 0.001 to 9.999 pounds.

6. This parameter is used to access the **ACTUAL CONDITIONS - SCALES (1.3)** screen.

SCREEN 2 **STATIC PRESSURE**

```
ALARM        Static Pressure
=========================================
Actual Value................   0.050
Actual Target...............   0.090
Attic Target................   0.070
Vent Target.................   0.090
Tunnel Target...............   0.050
Differential................   0.010
Ramping.....................  INSIDE
Lo Alarm SP..(Alm.Rel: ON)..   0.020
Lo Alarm Delay..............     300
Hi Alarm SP.................   0.100
Hi Alarm Delay..............      60
Vent Open Time Before Fan On       15
Close/Open Switching Delay..        5
Ceiling Inlet Adjustments
Static Pressure Ramping  Inside  Outside
```

Some parameters may not appear if their corresponding option is not activated. To verify these options, refer to the **SYSTEM CONFIGURATION (12.5)** and **OUTPUT CONFIGURATION (12.6)** screens.

If there is no ventilation inlet enabled, tunnel inlet will act as the ventilation inlet in minimum ventilation mode, following the `VENT TARGET` setting and furthermore, tunnel help logic will not be considered. Tunnel inlet will also follow curtain 1 demand if curtain 1 has reached its opening condition.

Vent and tunnel inlet behaviors may be greatly affected by tunnel fans and curtains. Refer to the **TUNNEL FANS (5)** and **CURTAINS (12.8)** screens for more information.

1. This parameter displays the actual reading of the static pressure sensor. This sensor ranges from 0.000“WC to 0.200“WC.

2. This parameter displays the actual static pressure target. This value changes according to ventilation mode and static pressure ramping.

3. This parameter is used to set the high and low static pressure set points when the control uses the attic inlet to maintain static pressure. The `DIFFERENTIAL` will be added and subtracted to this parameter to have the high and low set points. If static pressure is below `ATTIC TARGET - DIFFERENTIAL`, the ventilation and/or attic inlets will close. If static pressure is above `ATTIC TARGET + DIFFERENTIAL`, the ventilation and/or attic inlets will open. This parameter is adjusted in 0.001”WC increments from 0.000”WC to 0.200”WC.

4. This parameter is used to set the high and low static pressure set points when the control is in minimum ventilation mode and the attic inlet is not used. The `DIFFERENTIAL` will be added and subtracted to this parameter to have the high and low set points. If static pressure is below `VENT TARGET - DIFFERENTIAL`, the ventilation inlet will close. If static pressure is above `VENT TARGET + DIFFERENTIAL`, the ventilation inlet will open. This parameter is adjusted in 0.001”WC increments from 0.000”WC to 0.200”WC.

5. This parameter is used to set the high and low static pressure set points when the control is in tunnel mode. The DIFFERENTIAL will be added and subtracted to this parameter to have the high and low set points. If static pressure is below TUNNEL TARGET - DIFFERENTIAL, the tunnel inlet will close. If static pressure is above TUNNEL TARGET + DIFFERENTIAL, the tunnel inlet will open. This parameter is adjusted in 0.001”WC increments from 0.000”WC to 0.200”WC.

6. This parameter establishes the differential for static pressure targets. This value will be added and subtracted from the actual static pressure target to get high and low static pressure set points. This parameter is adjusted in 0.001”WC increments from 0.005”WC to 0.200”WC.

7. This parameter indicates which pressure settings are used by the control. If RAMPING is set to OFF, VENT and TUNNEL TARGET will be used. If RAMPING is set to INSIDE, static pressure target will be determined by the average temperature and parameters adjusted in the **STAT PRESS RAMPING INSIDE (2.1)** screen. If an outside sensor is used, one more option (OUTSIDE) is available. If RAMPING is set to OUTSIDE, the control will use the outside settings and functions in the **STAT PRESS RAMPING OUTSIDE (2.2)** screen.

8. This parameter is used to set the alarm relay ON or OFF on a low-pressure alarm. Even if this option is set to “OFF”, the alarm is triggered in the **ALARM LIST (11.1)** screen except that the alarm relay is not activated and “ALARM” will be shown in the top left corner of each screen.

9. This parameter is used to set a delay that allows the pressure to exceed the limit LO ALARM SP without activating the alarm. There is an alarm satisfy time fixed at 5 seconds that allows the static pressure to return above LO ALARM SP without reinitializing the delay LO ALARM DELAY. The LO ALARM DELAY is adjusted in 1-second increments from 10 seconds to 900 seconds.

Ex: LO ALARM SP = 0.020“WC;
LO ALARM DELAY = 300 seconds;
When static pressure is below 0.020“WC, the LO ALARM DELAY is activated. If the static pressure stays below 0.020“WC throughout the LO ALARM DELAY, the alarm will activate. If static pressure returns above LO ALARM SP for more than 5 seconds, the low-pressure alarm (or LO ALARM DELAY) will be reinitialized. Sidewall fans are affected by the low-pressure alarm. They will turn back on if previously forced to stop by tunnel transitions “STOP” (Min Fan Stop) or “START” (Tunnel Start). They will turn back off when the low static pressure alarm condition disappears.

10. This parameter is used to establish the high-pressure alarm limit. When pressure is above HI ALARM SP, the HI ALARM DELAY is activated. This parameter can also be modified in the **ALARM (11)** screen. The HI ALARM SP is adjusted in 0.001“WC increments from 0.050“WC to 0.200“WC.

11. This parameter is used to set a delay that allows the pressure to exceed the limit `HI ALARM SP` without activating the alarm. The `HI ALARM DELAY` is adjusted in 1-second increments from 10 seconds to 900 seconds.

Ex: `HI ALARM SP` = 0.100“WC;
`HI ALARM DELAY` = 60 seconds;
When static pressure is above 0.100“WC, the `HI ALARM DELAY` is activated. If the static pressure stays above 0.100“WC throughout the `HI ALARM DELAY`, the alarm will activate. Tunnel and ventilation inlet are also affected by the high-pressure alarm. When a high static pressure alarm is activated, ventilation inlet will be forced to follow static pressure settings of the current mode. Tunnel inlet will open according to static pressure settings of the current mode, but will not close when static pressure is low. This behavior will be effective until the high static pressure alarm condition disappears.

12. When the temperature is below all sidewall fan and tunnel fan relative set points, the ventilation inlet will follow static pressure sensor and the parameter `VENT OPEN TIME BEFORE FAN ON`. The minimum ventilation timer has an ON time and an OFF time. Depending on the time chosen for the `VENT OPEN TIME BEFORE FAN ON`, the ventilation inlet will start opening during the minimum ventilation OFF time and will stop once the OFF time has expired. As the ON time begins, the fans will be activated and the ventilation inlet will operate according to the static pressure sensor. The `VENT OPEN TIME BEFORE FAN ON` is adjusted in 1-second increments from OFF, 3 seconds to 300 seconds.

Ex: All sidewall fans and tunnel fans are below their respective RSP;
`VENT OPEN TIME BEFORE FAN ON` = 40 seconds;
`MIN VENT ON TIME` = 120 seconds (see **MIN VENT TIMER & RAMPING** screen);
`MIN VENT CYCLE TIME` = 5 minutes;
`CLOSE/OPEN SWITCHING DELAY` = 5 seconds;

The ventilation inlet will react as follows:
The fans are OFF for 3 minutes and ON for 2 minutes. The ventilation inlet follows static pressure sensor for all the ON time and for 2 minutes and 15 seconds of the OFF time. At 45 seconds of the end of minimum ventilation time OFF (3 minutes - 40 seconds - 5 seconds = 2 minutes and 15 seconds), the ventilation inlet will open for 40 seconds (until the beginning of the ON time), and so on until a temperature demand occurs.

13. This parameter is used to set the delay the ventilation and tunnel inlets will wait before changing states from halt to open or close, open to close or close to open. This delay does not affect tunnel inlet when it follows a curtain. The `CLOSE/OPEN SWITCHING DELAY` is adjusted in 1-second increments from 0 seconds to 30 seconds.

14. This parameter is used to access the **ATTIC INLET ADJUSTMENTS (2.3)** screen.

15. This parameter is used to establish the low-pressure alarm limit. When pressure is below `LO ALARM SP`, the `LO ALARM DELAY` is activated. This parameter can also be modified in the **ALARM (11)** screen. The `LO ALARM SP` is adjusted in 0.001“WC increments from 0.005“WC to 0.100“WC.

16. This parameter is used to access the **STAT PRESS RAMPING INSIDE (2.1)** screen.

17. This parameter is used to access the **STAT PRESS RAMPING OUTSIDE (2.2)** screen.

SUB SCREEN 2.1 **STAT PRESS RAMPING INSIDE**

```
ALARM    Stat Press Ramping Inside
=========================================
                Temp    Static    Used
      1    <    60.0     0.120     Y
      2    =    61.0     0.110     Y
      3    =    62.5     0.100     Y
      4    =    65.0     0.090     Y
      5    =    67.5     0.080     Y
      6    =    70.0     0.075     Y
      7    =    74.0     0.070     Y
      8    =    78.0     0.065     N
      9    =    82.0     0.060     N
      10   =    86.0     0.050     N
      11   =    90.0     0.035     Y
      12   =    91.0     0.020     Y
```

1. These parameters are used to set the temperature at which the static pressure set point will be equal to the value of the same line. When the average temperature reaches this value, the static pressure set point will be equal to `STATIC` set point of the same line. A fixed differential of 0.3°F is used with each temperature setting. These settings are forced into ascending order. These parameters are affected by the `TARGET TEMP` parameter. These parameters are adjusted in 0.1°F increments from `TARGET TEMP` - 30.0°F to `TARGET TEMP` + 20.0°F.

2. These parameters are used to set the static pressure set point that will be used when the average temperature reaches the temperature value of the same line. The `DIFFERENTIAL` parameter in the **STATIC PRESSURE (2)** screen will be added and subtracted to the calculated static pressure set point to have the high and low static pressure set points. If static pressure is below the calculated set point `- DIFFERENTIAL`, the ventilation inlet will close. If static pressure is above the calculated set point `+ DIFFERENTIAL`, the ventilation inlet will open. These parameters are adjusted in 0.001”WC from 0.020”WC to 0.150”WC.

3. These parameters are used to determine if the respective inside ramping step is used or unused. When one of these parameters is set to “N”, the corresponding step will be ignored. When the average temperature is below all `TEMP` values, the first step that has its option set to “Y” will be used. When the average temperature is above all `TEMP` values, the last step that has its option set to “Y” will be used. If all of these options are set to “N”, the Vent target adjusted in the **STATIC PRESSURE (2)** screen will be used.

SUB SCREEN 2.2 **STAT PRESS RAMPING OUTSIDE**

```
ALARM     Stat Press Ramping Outside
=========================================
Start
------    Day.............      1   (1)
          Outside Temp....   80.0   (2)
          Target Pressure.  0.090   (3)
------    Max Modulation..  0.050   (4)

Finish
------    Day.............     75   (5)
          Outside Temp....   60.0   (6)
          Target Pressure.  0.050   (7)
------    Max Modulation..  0.040   (8)

          Mod Band/5 Deg..  0.005   (9)
```

If this screen is not accessible, be sure to check if `OUTSIDE PROBE` option is set to "Y" in **SYSTEM CONFIGURATION (12.5)** screen.

1. This parameter establishes the `START DAY` for the `START TARGET PRESSURE`. `START DAY` is adjusted in 1-day increments from day 1 to day 365.

2. This parameter establishes the outside temperature set point for the `START TARGET PRESSURE`. `START OUTSIDE TEMP` is adjusted in 0.1°F from -58.0°F to 140.0°F.

3. This parameter establishes the target static pressure for the `START DAY`. `START TARGET PRESSURE` is adjusted in 0.001"WC increments from 0.000"WC to 0.200"WC.

4. This parameter establishes the maximum inches of water column static pressure can modulate at the `START DAY` regardless of how high or low the outside temperature goes. `START MAX MODULATION` is adjusted in 0.001"WC increments from 0.000"WC to 0.150"WC.

5. This parameter establishes the `FINISH DAY` for the `FINISH TARGET PRESSURE`. The `FINISH DAY` is adjusted in 1-day increments from day 1 to day 365.

6. This parameter establishes the outside temperature set point for the `FINISH TARGET PRESSURE`. The `FINISH OUTSIDE TEMP` is adjusted in 0.1°F increments from -58.0°F to 140.0°F.

7. This parameter establishes the target static pressure for the `FINISH DAY`. The `FINISH TARGET PRESSURE` is adjusted in 0.001"WC increments from 0.000"WC to 0.200"WC.

8. This parameter establishes the maximum inches of water column static pressure can modulate at the `FINISH DAY` regardless of how high or low the outside temperature goes. The `FINISH MAX MODULATION` is adjusted in 0.001"WC increments from 0.000"WC to 0.150"WC.

9. This parameter establishes number of "WC static pressure will modulate from the target for every 5 degrees the outside temperature changes. The `MOD BAND/5 DEG` is adjusted in 0.001"WC increments from 0.000"WC to 0.150"WC.

Example:

System will function as follows:
Static pressure target will be controlled by `RAMPING` (if ramping is activated), `START&FINISH TARGET PRESSURE` and `START&FINISH OUTSIDE TEMP`. See example and chart below.

<u>Day 1</u>
`START DAY` = 1;
`START OUTSIDE TEMP` = 85.0°F;
`START TARGET PRESSURE` = 0.080"WC;
`MOD BAND/5 DEG` = 0.005"WC;
`START MAX MODULATION` = 0.005"WC;
If outside temperature is 85.0°F, static pressure target will be 0.080"WC.
If outside temperature increases to 90.0°F, static pressure target will decrease to 0.075"WC.
Static pressure target cannot decrease below 0.075"WC, even if outside temperature increases to 95.0°F or above.

<u>Day 70</u>
`FINISH DAY` = 70;
`FINISH OUTSIDE TEMP` = 60.0°F;
`FINISH TARGET PRESSURE` = 0.050"WC;
`MOD BAND/5 DEG` = 0.005"WC;
`FINISH MAX MODULATION` = 0.030"WC;
If outside temperature is 65.0°F, static pressure target will decrease to 0.045"WC.
If outside temperature increases to 70.0°F, static pressure target will decrease to 0.040"WC.
If outside temperature increases to 75.0°F, static pressure target will decrease to 0.035"WC.
If outside temperature increases to 80.0°F, static pressure target will decrease to 0.030"WC.
If outside temperature increases to 85.0°F, static pressure target will decrease to 0.025"WC.
If outside temperature increases to 90.0°F, static pressure target will decrease to 0.020"WC.
Static pressure target cannot decrease below 0.020"WC, even if outside temperature increases to 95.0°F or above.

If outside temperature decreases to 55.0°F, static pressure target will increase to 0.055“WC.
If outside temperature decreases to 50.0°F, static pressure target will increase to 0.060“WC.
If outside temperature decreases to 45.0°F, static pressure target will increase to 0.065“WC.
If outside temperature decreases to 40.0°F, static pressure target will increase to 0.070“WC.
If outside temperature decreases to 35.0°F, static pressure target will increase to 0.075“WC.
If outside temperature decreases to 30.0°F, static pressure target will increase to 0.080“WC.
Static pressure target cannot increase above 0.080“WC, even if outside temperature decreases to 25.0°F or below.

<u>In between Day 1 & Day 70</u>
Static pressure target will modulate by values selected in; `START&FINISH DAY`, `START&FINISH OUTSIDE TEMP`, `START&FINISH TARGET PRESSURE`, `MOD BAND/5 DEG`, `START&FINISH MAX MODULATION`.

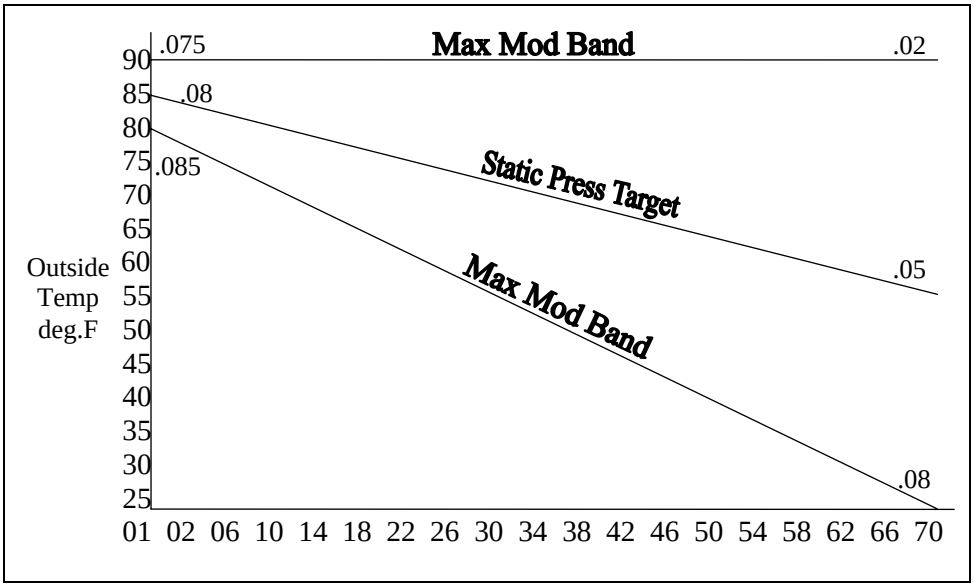

SUB SCREEN 2.3 ATTIC INLET ADJUSTMENTS

```
ALARM     Attic Inlet Adjustments
========================================

Attic Vent Select.....    Attic First   (1)

Transition Delay.........     30sec      (2)

Attic Vent Close Temp....     73.0       (3)
Attic Vent Close Diff....      1.0       (4)

                         123456789012
      Sensor Select:     123456789012    (5)
```

This screen will only be available if the STATIC PRESS option is activated, the ventilation inlet and attic inlet is enabled. To verify these options, refer to the **SYSTEM CONFIGURATION (12.5)** and **OUTPUT CONFIGURATION (12.6)** screens. **Refer to the example on page 20 for more description on the attic inlet logic.**

1. This parameter is used to adjust which mode the attic inlet will be using. If this parameter is set to “Attic First”, the attic inlet will maintain static press according to the ATTIC TARGET and the ventilation inlet will close. In this mode, if attic ventilation inlet cannot maintain static pressure, it will transfer to the ventilation inlet. If this parameter is set to “Attic & Vent”, the attic inlet and the ventilation inlet will both react according to the ATTIC TARGET. If this parameter is set to “Vent Only”, the attic ventilation inlet will close continuously and the ventilation inlet will react according to the VENT TARGET.

2. This parameter is used to adjust the amount of time that the pressure has to be out of pressure targets before switching the output that maintains pressure. The TRANSITION DELAY will start when the pressure is above VENT/ATTIC TARGET + DIFFERENTIAL or below VENT/ATTIC TARGET - DIFFERENTIAL. This parameter is adjusted in 1-second increments from 1 second to 120 seconds.

3. This parameter is used to adjust the temperature at which the attic ventilation inlet will close continuously and the ventilation inlet will maintain static pressure. If the attic ventilation inlet’s temperature is at or above this temperature, the attic ventilation inlet will close continuously and the ventilation inlet will react according to the VENT/ATTIC TARGET. This parameter is adjusted in 0.1°F increments from TARGET TEMP + 0.0°F to TARGET TEMP + 40.0°F.

4. This parameter is used to set the differential on the ATTIC VENT CLOSE TEMP. When the sensor(s) select average temperature decreases to ATTIC VENT CLOSE TEMP - ATTIC VENT CLOSE DIFF the ventilation inlet will close continuously and attic will maintain static pressure. This parameter is adjusted in 0.1°F increments from 0.5°F to 10.0°F.

5. This parameter is used to set an individual associated temperature to the attic inlet. The temperature associated to this output is a combination of the inside probes that are used.

Attic inlet logic description

The attic inlet is not affected by the high-pressure alarm. If there is a high-pressure alarm, the ventilation inlet and tunnel curtain will maintain static pressure according to the current mode (minimum ventilation or tunnel mode).

Attic First mode

- Attic inlet maintains pressure according to the `ATTIC TARGET`.

- If the pressure is above the `ATTIC TARGET` + `DIFFERENTIAL` for more than `TRANSITION DELAY`, the attic inlet will open continuously and vent will maintain static pressure according to the respective target. If the pressure is below the `ATTIC TARGET` - `DIFFERENTIAL` for more than `TRANSITION DELAY`, the vent will close continuously and attic inlet will maintain static pressure.

- If in tunnel help, the attic inlet will open continuously. Vent closes continuously. If the pressure is above the `ATTIC TARGET` + `DIFFERENTIAL` for more than `TRANSITION DELAY`, the ventilation inlet will open continuously. If the pressure is below the `ATTIC TARGET` - `DIFFERENTIAL` for more than `TRANSITION DELAY`, the vent will close continuously.

- In tunnel mode, the attic inlet and ventilation inlet will close continuously.

Attic & Vent mode

- Attic inlet follows the ventilation inlet.

- In tunnel help, the attic inlet and ventilation inlet will open continuously.

- In tunnel mode, the attic inlet and ventilation inlet will close continuously.

Vent Only mode

- Ventilation inlet maintains pressure according to the `VENT TARGET`.

- Attic inlet will close continuously.

Inlet behavior according to ventilation modes table:

	Attic First Mode	**Attic & Vent Mode**	**Vent Only Mode** or **Attic Vent Close Temp**
Minimum Ventilation	***Attic Inlet*** follows Attic Target. ***Vent Inlet*** and ***Tunnel Inlet*** close continuously.	***Attic Inlet*** and ***Vent Inlet*** follow Attic Target. ***Tunnel Inlet*** closes continuously.	***Attic Inlet*** closes continuously. ***Vent Inlet*** follows Vent Target. ***Tunnel Inlet*** closes continuously.
Minimum Ventilation Attic Inlet Maxed Out*	***Attic Inlet*** opens continuously. ***Vent Inlet*** follows Attic Target. ***Tunnel Inlet*** closes continuously.	Not available.	Not available.
Tunnel Help	***Attic Inlet*** opens continuously. ***Vent Inlet*** closes continuously. ***Tunnel Inlet*** follows Attic Target.	***Attic Inlet*** and ***Vent Inlet*** open continuously. ***Tunnel Inlet*** follows Attic Target.	***Attic Inlet*** closes continuously. ***Vent Inlet*** opens continuously. ***Tunnel Inlet*** follows Vent Target.
Tunnel Help Attic Inlet Maxed Out*	***Attic Inlet*** opens continuously. ***Vent Inlet*** opens continuously. ***Tunnel Inlet*** follows Attic Target.	Not available.	Not available.
Tunnel Mode	***Attic Inlet*** and ***Vent Inlet*** close continuously.		
	Tunnel Inlet follows Tunnel Target.		

* Attic inlet is Maxed Out when pressure exceeds the `ATTIC TARGET` + `DIFFERENTIAL` for more than `TRANSITION DELAY`. It will cease being Maxed Out when pressure is below the `ATTIC TARGET` - `DIFFERENTIAL` for more than `TRANSITION DELAY`.

Notes:

- When using Outside Ramping on static pressure, the calculated target will replace all Vent Targets and Tunnel Targets in this table.
- When using Inside Ramping on static pressure, the calculated target will replace all Vent Target in this table.
- When a high static pressure alarm is active Vent Inlet and Tunnel inlet will cease to open or close continuously and will follow the target used in the actual mode and condition. Furthermore, tunnel inlet will never close when a high static pressure alarm is active.

SCREEN 3 **HEAT & BROOD**

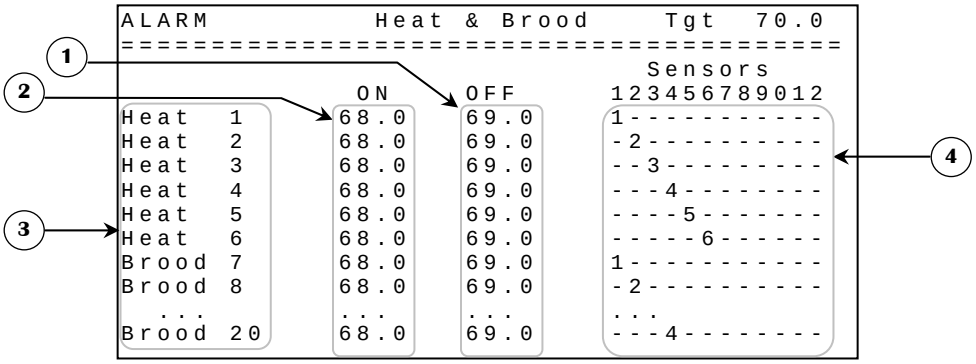

Some parameters may not appear if their corresponding option is not activated. To verify these options, refer to the **SYSTEM CONFIGURATION (12.5)** and **OUTPUT CONFIGURATION (12.6)** screens.

1. These parameters are used to set the heater/brooder differentials. The respective heater/brooder deactivates when its respective selected sensor(s) average temperature increases to `HEAT/BROOD # OFF`. These parameters are affected by the respective `HEAT/BROOD # ON` parameter. These parameters are adjusted in 0.1°F increments from its respective `HEAT/BROOD # ON` parameter + 0.5°F to its respective `HEAT/BROOD # ON` parameter +10.0°F.

2. These parameters are used to set the heater/brooder set points. The respective heater/brooder is activated when its respective selected sensor(s) average temperature decreases to `HEAT/BROOD # ON`. Changing one of these parameters will affect the respective `HEAT/BROOD # OFF` parameter. These parameters are affected by the `TARGET TEMP` parameter. These parameters are adjusted in 0.1°F increments from `TARGET TEMP` - 50.0°F to `TARGET TEMP` + 10.0°F.

3. These parameters display the name and number of the output as selected in the **OUTPUT CONFIGURATION (12.6)** screen.

4. These parameters are used to set an individual associated temperature to the respective output. The temperatures associated to these heaters/brooders are a combination of the inside probes that are used.

SCREEN 4 **SIDEWALL FANS**

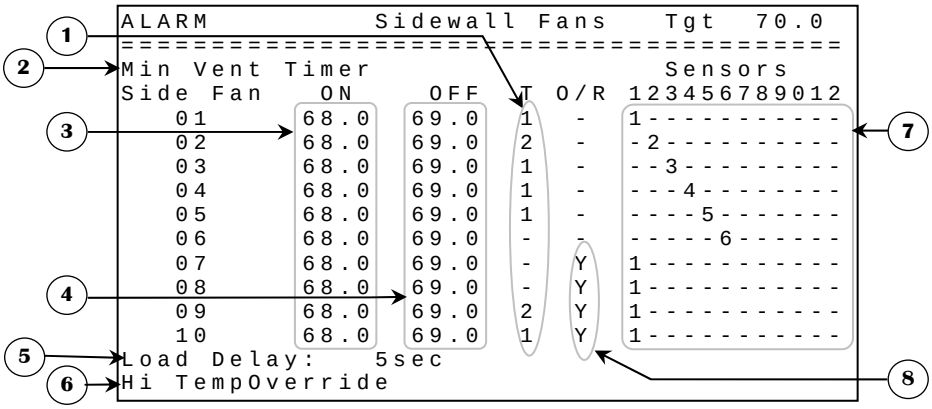

Some parameters may not appear if their corresponding option is not activated. To verify these options, refer to the **SYSTEM CONFIGURATION (12.5)** and **OUTPUT CONFIGURATION (12.6)** screens.

1. These parameters are used to establish on which portion of the minimum ventilation timer the respective sidewall fan will be activated. If a parameter is set to none of the portions of the timer, the respective sidewall fan will be activated only when it has a temperature demand. These parameters can be set to portion #1, #2 or none. If some fans (including tunnel fans) are set to portion #1 and none on portion #2 (or some fans are set on portion #2 and none on portion #1), fans on timer activate on portion #1 and #2. If none of the sidewall fans and tunnel fans run on the minimum ventilation timer, the timer will stop to restart on the off portion as soon as one of these fans needs to run on minimum ventilation timer.

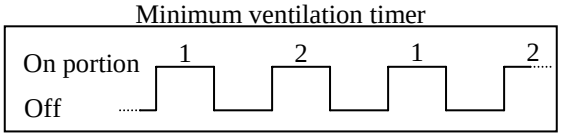

2. This parameter is used to access the **MIN VENT TIMER &RAMPING (4.1)** screen.

3. These parameters are used to set the sidewall fan set points. The respective sidewall fan is activated when its respective sensor(s) select average temperature increases to `SIDEWALL FAN # ON`. Changing one of these parameters will affect the respective `SIDEWALL FAN # OFF` parameter. These parameters are affected by the `TARGET TEMP` parameter. These parameters are adjusted in 0.1°F increments from `TARGET TEMP` to `TARGET TEMP` + 60.0°F.

4. These parameters are used to set the sidewall fan differentials. The respective sidewall fan deactivates when its respective sensor(s) select average temperature decreases to `SIDEWALL FAN # OFF`. These parameters are affected by the respective `SIDEWALL FAN # ON` parameter. These parameters are adjusted in 0.1°F increments from its respective `SIDEWALL FAN # ON` - 20.0°F to its respective `SIDEWALL FAN # ON` - 0.5°F parameter.

5. This parameter establishes the time between the activation of multiple fans. This delay allows the fans to activate with a delay between them to reduce the chance of a power shortage due to too many fans activating at the same time. This delay is not applied on timer activation. This parameter is adjusted 1-second increments from 2 seconds to 60 seconds.

6. This parameter is used to access the **FAN STOP OVERRIDE (4.2)** screen.

7. These parameters are used to set an individual associated temperature to the respective output. The temperatures associated to these sidewall fans are a combination of the inside probes that are used.

8. This parameter allows the user to have sidewall fans activate if `HIGH TEMP OVERRIDE` is reached, regardless of tunnel mode and timers. If the average temperature reaches the `HIGH TEMP OVERRIDE` set point, sidewall fans with the option “Y” will activate.

SUB SCREEN 4.1

MIN VENT TIMER & RAMPING

```
ALARM   Min Vent Timer & Ramping
========================================
Min Vent On Time............  79 Sec
Add Time 1.0 deg above SP...  15 Sec
Add Time 1.5 deg above SP...  15 Sec
Add Time 2.0 deg above SP...  15 Sec
Add Time 2.5 deg above SP... OFF
Add Time Clock                15 Sec
Vent Cycle Time.............   5 Min
Clock      ON( 8:30A)       OFF( 6:27P)

Ramping  ( ON)     Ramping Day    5
D=First Line Day       T=Second Line Time
D  1   3   7  14  21  28  35  42  42  42
T 45  50  60  75  90 105 120 150 150 150
Timer stops on temperature demand: YES
```

1. This parameter is used to establish the minimum ventilation ON time when the average temperature is not above the `TARGET TEMP` + 1.0°F. If `MIN VENT ON TIME` is longer than `VENT CYCLE TIME` then timer will always be ON. The `MIN VENT ON TIME` is adjusted in 1-second increments from 2 seconds to 900 seconds.

2. This parameter is used to increase the minimum ventilation ON time when the average temperature is more than 1.0°F above the `TARGET TEMP`. The value set at this parameter will be added to the `MIN VENT ON TIME`. The `ADD TIME 1.0 DEG ABOVE SP` is adjusted in 1-second increments from OFF, 3 seconds to 60 seconds.

3. This parameter is used to increase the minimum ventilation ON time when the average temperature is more than 1.5°F above the `TARGET TEMP`. The value set at this parameter will be added to the `MIN VENT ON TIME`. The `ADD TIME 1.5 DEG ABOVE SP` is adjusted in 1-second increments from OFF, 3 seconds to 60 seconds.

4. This parameter is used to increase the minimum ventilation ON time when the average temperature is more than 2.0°F above the `TARGET TEMP`. The value set at this parameter will be added to the `MIN VENT ON TIME`. The `ADD TIME 2.0 DEG ABOVE SP` is adjusted in 1-second increments from OFF, 3 seconds to 60 seconds.

5. This parameter is used to increase the minimum ventilation ON time when the average temperature is more than 2.5°F above the `TARGET TEMP`. The value set at this parameter will be added to the `MIN VENT ON TIME`. The `ADD TIME 2.5 DEG ABOVE SP` is adjusted in 1-second increments from OFF, 3 seconds to 60 seconds.

6. This parameter is used to increase the minimum ventilation ON time when the time of day is between `CLOCK ON` and `CLOCK OFF`. The value set at this parameter will be added to the `MIN VENT ON TIME`. The `ADD TIME CLOCK` is adjusted in 1-second increments from OFF, 3 seconds to 60 seconds.

7. This parameter is used to establish the cycle time of the minimum ventilation timer. The `VENT CYCLE TIME` is adjusted in 1-minute increments from 1 to 15 minutes.

Ex: `MIN VENT ON TIME` = 30 seconds;
`VENT CYCLE TIME` = 5 minutes;
`TARGET TEMP` = 70.0°F;
`ADD TIME 1.0 DEG ABOVE SP` = 15 seconds;
`ADD TIME 1.5 DEG ABOVE SP` = 15 seconds;

The minimum ventilation timer follows these steps as the average temperature increases so, when average temperature is:

- Below 71.1°F, the minimum ventilation timer will be ON 30 seconds and OFF 4 minutes and 30 seconds.
- Between 71.1°F and 71.5°F, the minimum ventilation timer will be ON 45 seconds and OFF 4 minutes and 15 seconds.
- At and above 71.6°F, the minimum ventilation timer will be ON 60 seconds and OFF 4 minutes.

8. This parameter is used to set the time at which the `ADD TIME CLOCK` will be added to the minimum ventilation ON time. When the time of day reaches this value, the minimum ventilation ON time will be increased by `ADD TIME CLOCK`. This increase will remain until the time of day reaches `CLOCK OFF`. This parameter can be adjusted to any value from 12:00A to 11:59P.

9. This parameter is used to set the ramping curve function ON or OFF for the minimum ventilation timer. If the parameter is set to ON and the `RAMPING STARTDAY` of the **SETPOINTS (1.2)** screen is not set to OFF, `MIN VENT ON TIME` will follow the curve function and user will not be able to manually modify this parameter nor the `DAY` points and `TIME` points.

10. These parameters are used to set the days used for the ramping curve function for minimum ventilation timer. These parameters are adjusted in 1-day increments from day 0 to day 365.

11. These parameters are used to set the time of the minimum ventilation timer, relative to the day for ramping function. These parameters are adjusted in 1-second increments from 2 seconds to 900 seconds.

12. This parameter is used to set the time at which the `ADD TIME CLOCK` will no longer be added to the minimum ventilation ON time. When the time of day reaches this value, the minimum ventilation ON time will no longer be increased by `ADD TIME CLOCK`. This increase will begin once again when the time of day reaches `CLOCK ON`. This parameter can be adjusted to any value from 12:00A to 11:59P.

13. This parameter displays the current ramping day for the minimum ventilation timer. This ramping day reflects the `RAMPING STARTDAY` parameter in **SETPOINTS (1.2)** screen and cannot be modified from this screen.

14. This parameter is used to deactivate the minimum ventilation timer when a fan starts on a temperature demand. If set to YES, when a fan starts on a temperature demand, minimum ventilation logic will be deactivated. If set to NO, all fans that are selected to run with minimum ventilation timer will follow the timer even if a fan is running on a temperature demand.

SUB SCREEN **4.2** **FAN STOP OVERRIDE**

```
ALARM        Fan Stop Override
========================================
(1)                  Target    70.0
(2)          High Temp Override  90.0
```

1. This parameter reflects the TARGET TEMP of the **SETPOINTS (1.2)** screen.

2. This parameter sets the temperature at which sidewall fans will activate, regardless of tunnel mode and timers. If the average temperature reaches this absolute temperature, sidewall fans with the SIDEWALL FAN # OVERRIDE OPTION set to “Y” in the **SIDEWALL FANS (4.0)** screen will activate. There is a fixed differential of 0.3°F. The HIGH TEMP OVERRIDE is adjusted in 0.1°F increments from TARGETTEMP to TARGETTEMP + 50.0°F.

SCREEN **5** **TUNNEL FANS**

```
ALARM            Tunnel Fans      Tgt  70.0
=================================================
Tun Delay ON     OFF  T Tran 123456789012
TunCurt   69.0   68.0   --   --34--------
TFan01    69.0   68.0 -  HELP --34--------
TFan02    69.0   68.0 1  STOP --34--------
TFan03    69.0   68.0 2  TUN  --34--------
TFan04    69.0   68.0 2   --  --34--------
TFan05    69.0   68.0 2   --  --34--------
TFan06    69.0   68.0 -   --  --34--------
TFan07    69.0   68.0 -   --  --34--------
TFan08    69.0   68.0 2   --  --34--------
TFan09    69.0   68.0 2   --  --34--------
...      ...    ...     ...  ..
TFan20    69.0   68.0 1   --  --34--------
```

Some parameters may not appear if their corresponding option is not activated. To verify these options, refer to the **SYSTEM CONFIGURATION (12.5)** and **OUTPUT CONFIGURATION (12.6)** screens.

If there is no ventilation inlet enabled, tunnel help logic will not be considered.

1. These parameters are used to set the tunnel fan differentials. The respective tunnel fan deactivates when its respective sensor(s) select average temperature decreases to `TUNNEL # OFF`. These parameters are affected by the respective `TUNNEL # ON` parameter. These parameters are adjusted in 0.1°F increments from its respective `TUNNEL # ON` - 10.0°F to its respective `TUNNEL # ON` - 0.5°F.

2. This parameter is used to access the **TUNNEL DELAYS (5.1)** screen.

3. These parameters are used to set the tunnel fan set points. The respective tunnel fan is activated when its respective sensor(s) select average temperature increases to `TUNNEL # ON`. Changing one of these parameters will affect the respective `TUNNEL # OFF` parameter. These parameters are affected by the `TARGET TEMP` parameter and are adjusted in 0.1°F increments from `TARGET TEMP` to `TARGET TEMP` + 40.0°F.

4. These parameters are used to establish on which portion of the minimum ventilation timer the respective tunnel fan will be activated. If a parameter is set to none of the portions of the timer, the respective tunnel fan will be activated only when it has a demand. These parameters can be set to portion #1, #2 or none. If some fans (including sidewall fans) are set to portion #1 and none on portion #2 (or some fans are set on portion #2 and none on portion #1), fans on timer activate on portion #1 and #2. If none of the sidewall fans and tunnel fans run on the minimum ventilation timer then the timer will stop to restart on the off portion as soon as one of these fans needs to run on minimum ventilation timer.

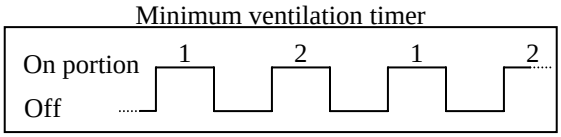

5. These parameters are used to set on which tunnel fan the transition functions will be activated. Two different parameter settings cannot have the same value (ex: if `TUNNEL FAN 1 TRANSITION` is set to "HELP" none of the other `TUNNEL FAN # TRANSITION` parameters can be set to "HELP"). These parameters can be set to "STOP", "HELP" or "TUN" by pressing SELECT button while positioned on one of these parameters. If a `TRANSITION TUNNEL FAN 1` to `TRANSITION TUNNEL FAN 20` is set to "TUN", `TUNCURT` will take the same settings as that tunnel fan.

6. These parameters are used to set an individual associated temperature to the respective output. The temperatures associated to these tunnel fans are a combination of the inside probes that are used.

Notes: **1-** The transition "STOP" is used to deactivate sidewall fans. When the tunnel fan that has the transition setting "STOP" is activated, all the sidewall fans will deactivate. They will reactivate when this same tunnel fan shuts OFF. When the tunnel fan that has the transition setting "HELP" is activated, the ventilation inlet opens continuously and tunnel inlet follows the static pressure. When the temperature decreases and tunnel fan shuts off, the ventilation inlet will follow the static pressure sensor and tunnel inlet will close continuously. If there is no ventilation inlet enabled, curtain 1 enabled and the associated temperature of "HELP" transition is equal or higher than `OPEN TEMP` in the **CURTAINS(12.8)** screen, tunnel help logic will not be considered. When the tunnel fan that has the transition setting "TUN" is activated, tunnel mode will begin (minimum ventilation ends). Once this tunnel fan deactivates, minimum ventilation restarts (tunnel mode ends). If none of the tunnel fans have this transition setting, no tunnel will be done. If no tunnel fan has the transition "STOP" or "HELP", the respective functions will be inactive. If the attic inlet is used, refer to the **Inlet behavior according to ventilation modes table** page 21.

2- All changes on settings will be effective only when exiting this screen.

SUB SCREEN 5.1 TUNNEL DELAYS

```
ALARM          Tunnel Delays
========================================
(1)  Delay Before............ 10 Sec
(2)  Delay After............. 10 Sec
(3)  Load Delay..............  5 Sec
```

1. This parameter establishes the delay that is used when entering the tunnel mode. When the tunnel fan that has the transition setting "TUN" is activated, tunnel inlet opens, sidewall fans are deactivated, tunnel fans except the tunnel fan that has the transition setting "TUN" are deactivated, and the ventilation inlet holds its present state and the curtains close. After the DELAY BEFORE has expired, respective tunnel fans are reset to the state they were before entering in tunnel mode, tunnel inlet follows static pressure sensor and ventilation inlet and curtains close continuously. The DELAY BEFORE is adjusted in 1-second increments from 2 seconds to 900 seconds.

Ex: TUNNEL FAN 1 TRANSITION = "STOP";
TUNNEL FAN 2 TRANSITION = "HELP";
TUNNEL FAN 3 TRANSITION = "TUN";
TUNNEL FAN 1 ON = 75.0°F;
TUNNEL FAN 2 ON = 77.0°F;
TUNNEL FAN 3 ON = 78.0°F;
All TUNNEL FAN # OFF are set to respective TUNNEL FAN # ON - 1.0°F;

- At 75.0°F, all sidewall fans are deactivated.
- At 77.0°F, ventilation inlet opens continuously and tunnel inlet follows static pressure sensor if it is not already following the curtain 1 demand.
- At 78.0°F, DELAY BEFORE is activated; all tunnel fans are deactivated except tunnel fan 3. The ventilation inlet holds its present state, tunnel inlet opens and curtains close. After the DELAY BEFORE has expired, tunnel fans, evaporative cooling cells and foggers are allowed to function, ventilation inlet closes and tunnel inlet follows static pressure sensor. Control is now in tunnel mode.
- When temperature decreases to 77.0°F, the ventilation inlet opens, curtain 1 and tunnel inlet will open continuously until curtain 1 has a closing demand, curtain 2 will also open continuously until it reaches a closing demand. If curtain 1 is not used, tunnel inlet follows static pressure sensor.
- When temperature decreases to 76.0°F, ventilation inlet follows the static pressure sensor and tunnel inlet closes continuously if it is not following the curtain 1 demand.
- When temperature decreases to 74.0°F, sidewall fans are allowed to reactivate.

If the attic inlet is used, refer to the **Inlet behavior according to ventilation modes table** page 21.

2. This parameter establishes the time delay for which the vent inlet will open continuously when the system exits the tunnel mode. Tunnel fan transition "HELP" overrides this parameter if selected. When the temperature decreases and reaches the TUNNEL FAN # OFF of the tunnel fan that has the transition setting "TUN", DELAY AFTER is activated and ventilation inlet, tunnel inlet and curtains open continuously, sidewall ventilation fans are reactivated and tunnel fans are reset to the state they were before entering in tunnel mode. Once the delay has expired, the ventilation inlet follows static pressure sensor. At this point, curtain 1 and tunnel inlet will open continuously until curtain 1 has a closing demand, curtain 2 will also open continuously until it reaches a closing demand. The DELAY AFTER is adjusted in 1-second increments from 2 seconds to 900 seconds.

Ex: - When the tunnel fan that has the transition setting "TUN" is turned off (exit tunnel mode), the ventilation inlet opens during the DELAY AFTER.
- Once DELAY AFTER is finished, the static pressure sensor will control the ventilation inlet.
- The time the ventilation inlet takes to open enough to prevent a static pressure surge must be set in DELAY AFTER.

3. This parameter establishes the time between the activation of multiple fans. This delay allows the fans to activate with a delay between them to reduce the chance of a power shortage due to too many fans activating at the same time. This delay is not applied on timer activation. This parameter is adjusted 1-second increments from 2 seconds to 60 seconds.

SCREEN 6 **EVAP COOL/FOG**

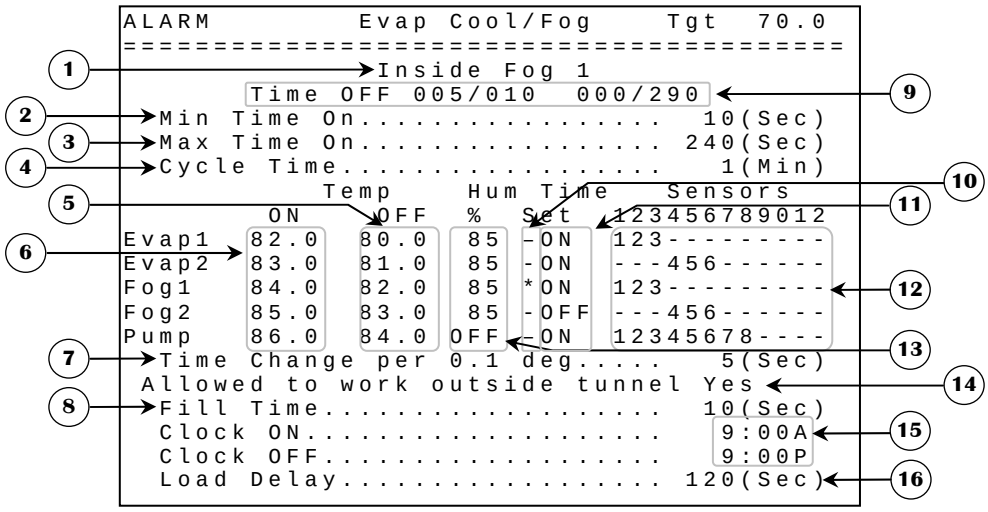

Some parameters may not appear if their corresponding option is not activated. To verify these options, refer to the **SYSTEM CONFIGURATION (12.5)** and **OUTPUT CONFIGURATION (12.6)** screens.

1. This parameter is used to indicate which output's timer settings are displayed. This is chosen at the `TIME SET` parameter.

2. This parameter is used to establish the minimum ON time of the chosen output's timer. The `MIN TIME ON` is adjusted in 1-second increments from 1 second to 600 seconds.

3. This parameter is used to establish the maximum ON time of the chosen output's timer. The `MAX TIME ON` is adjusted in 1-second increments from 1 second to 600 seconds.

4. This parameter is used to establish the cycle time of the chosen output's timer. The OFF portion of a respective timer begins at `CYCLE TIME` - `MIN TIME ON`. The `CYCLE TIME` is adjusted in 1-minute increments from 1 minute to 10 minutes.

5. These parameters are used to set the evaporative cooling cell, fogger and pump differentials. These parameters are affected by the respective `TEMP ON` parameter. These parameters are adjusted in 0.1°F increments from its respective `TEMP ON` - 30.0°F to its respective `TEMP ON` - 0.5°F.

6. These parameters are used to set the evaporative cooling cell, fogger and pump set points. The respective output is activated on timer when its respective sensor(s) select average temperature increases to its respective `TEMP ON`. Changing one of these parameters will affect the respective `TEMP OFF` parameter. These parameters are affected by the `TARGET TEMP` parameter. These parameters are adjusted in 0.1°F increments from `TARGET TEMP` to `TARGET TEMP` + 40.0°F.

7. This parameter is used to set the adjustment that is made to actual ON time when respective temperature is above the `TEMP ON` set point. After every cycle, respective timer adds the `TIME CHANGE PER 0.1 DEG` to the ON time for every 0.1 degrees above the `TEMP ON` until it reaches the `MAX TIME ON` or the `CYCLE TIME`. The same pattern is used to decrease the ON time when respective temperature is below `TEMP ON` until it decreases to or below the `MIN TIME ON`, at this point the output will be activated one more cycle with `MIN TIME ON` before it deactivates until temperature reaches `TEMP ON` again. This parameter is adjustable in 1-second increments from 1 second to 60 seconds.

8. This parameter is used to select the time it takes to fill water lines before cooling begins. For the first fill time activation, `FILL TIME` is not included in `CYCLE TIME`. After the first ON time, respective output will be activated at the end of its OFF time, for a period of time equal to `FILL TIME` before its OFF time finishes. Once this `FILL TIME` is elapsed, the output will be activated according to its respective timer. This parameter is adjustable in 1-second increments from 1 second to 300 seconds.

9. These parameters show the respective timer state, ON time and OFF time of the chosen output, which is displayed at parameter 1.

10. These parameters are used to select an output to view its respective timer and settings at the top of the screen. Press SELECT on one of these parameters to show its timer settings. The timer shown is the output's timer which have a "*" displayed alongside of it.

11. These parameters are used to activate the respective output on its timer or continuously activate this respective output. If set to ON, respective output follows its own timer, otherwise this respective output will be continuously activated if its set point has been reached.

12. These parameters are used to set an individual associated temperature to the respective output. The temperatures associated to these outputs are a combination of the inside probes that are used.

13. These parameters establish the high humidity for the cooling. The cooling will not start or will deactivate if actual humidity is equal to or greater than this parameter. A humidity differential of 3 RH% is set to avoid oscillations. To deactivate this option, adjust to OFF. If the humidity probe is defective or unplugged, the control will act as if the humidity was very low, so this will not affect this logic. These parameters are adjustable in 1 RH% increments from 0 RH% to 99 RH%, OFF.

14. This parameter allows the user to choose whether the outputs mentioned in this screen will be permitted to active all the time or only when in tunnel mode.

15. These parameters are used to establish the time at which the cooling outputs (evaporative cooling, fogger and pump) may be activated. When the time of day is between `CLOCK ON` and `CLOCK OFF`, cooling outputs can be turned ON if there is a demand. Outside this time, cooling outputs will not be allowed to function. These parameters are adjusted in 1-minute increments from 12:00A to 11:59P.

16. This parameter is used to adjust the amount of time all cooling outputs (evaporative cooling, fogger and pump) will wait before activating after a power failure. The `LOAD DELAY` is adjusted in 1-second increments from 1 to 120 seconds.

SCREEN 7 **TARGET LIST**

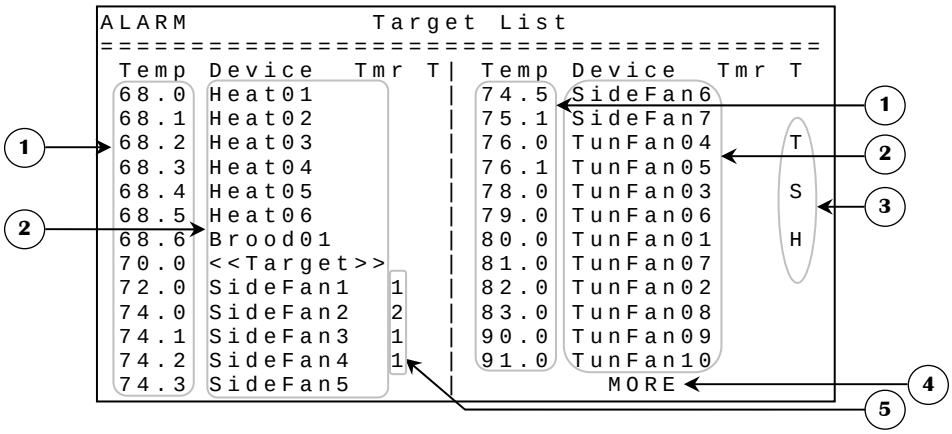

This screen shows a list of all outputs sorted by set point temperatures, including the `TARGET TEMP`. The output that has the lowest set point will be listed at the top of the list.

1. This column set points list is in numerical order. These parameters are linked to the device name beside them.

2. This column displays the output associated to the set points on left (except for target temp and tunnel curt; there is no output relay associated to these device names).

3. This column indicates which fan is selected for tunnel fan transition. (T for TUN, H for HELP, S for STOP).

4. This parameter is shown only if there is not enough room in this screen to display all outputs. This parameter allows the access to a similar screen that displays the rest of the list.

5. This column indicates on which portion of the minimum ventilation timer the output on the left is (applies only to sidewall and tunnel fans).

SCREEN **8** **BIRD COUNT**

```
ALARM       Bird Count / Scale
=========================================

1 ----------> Bird Count 1
2 ----------> Bird Count 2
3 ----------> Scale 1
4 ----------> Scale 2
```

1. This parameter is used to access the **BIRD COUNT 1(8.1)** screen.
2. This parameter is used to access the **BIRD COUNT 2(8.2)** screen.
3. This parameter is used to access the **SCALE 1(8.3)** screen.
4. This parameter is used to access the **SCALE 2(8.4)** screen.

SUB SCREENS 8.1-2 BIRD COUNT 1-2

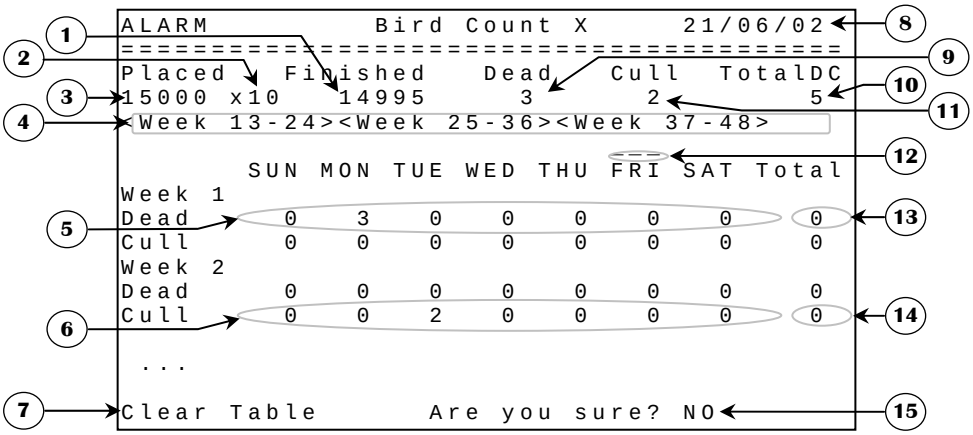

These screens show 4 groups of 12 weeks in succession (weeks 1-12, weeks 13-24, weeks 25-36, weeks 37-48) for a total of 48 weeks per bird count.

1. This parameter is used to show how many birds are still living. This parameter cannot be changed manually but PLACED, DEAD and CULL parameters affect it.

2. This parameter multiplies the number of birds placed by its value to obtain a very high number of birds in the building. For a number of birds higher than 32767, user must enter a lower number in the PLACED parameter and increase this parameter to multiply the number of placed birds. This value will not affect any dead count parameters, only the FINISHED parameter.

3. This parameter is used to set the total amount of birds initially placed in the building. This setting affects the FINISHED and TOTALDC parameters. The PLACED parameter is adjusted in 1-bird increments from 0 birds to 32767 birds.

4. These parameters are used to display another series of 12 weeks by pressing the SELECT button while on the appropriate parameter.

5. These 7 parameters (one for each day) are used to count the amount of birds dead from a natural cause. There are 12 different weeks and each week has 7 different days to keep track of the number of deaths each day. These parameters are adjusted in 1-death increments from 0 deaths to 999 deaths.

6. These 7 parameters (one for each day) are used to count the amount of birds killed intentionally. There are 12 different weeks and each week has 7 different days to keep track of the number of deaths each day. These parameters are adjusted in 1-death increments from 0 deaths to 999 deaths.

7. This parameter is used to clear all values contained in this screen. Press the SELECT button on this parameter and a confirmation text and choice will appear beside this parameter, the cursor will be positioned on the choice confirmation.

8. This parameter displays the current date.

9. This parameter is used to show the total amount of birds that are already dead. This parameter cannot be changed manually. This parameter is calculated by adding all WEEK # TOTAL DEAD parameters.

10. This parameter is used to show the total amount of dead birds. This parameter cannot be changed manually and is calculated by adding the DEAD and CULL parameters.

11. This parameter is used to show the total amount of birds that were killed intentionally. This parameter cannot be changed manually and is calculated by adding all WEEK # TOTAL CULL parameters.

12. This symbol is at the top of the current day.

13. These parameters (one for each week) are used to display the total amount of birds dead from a natural cause in one week. Each parameter is calculated by its respective death inventory in the same week for DEAD parameters.

14. These parameters (one for each week) are used to display the total amount of birds killed intentionally in one week. Each parameter is calculated by its respective death inventory in the same week for CULL parameters.

15. This parameter is used to confirm (“YES”) or refuse (“NO”) the action of clearing all values contained in this screen. Select your choice and press the SELECT button. If choice is “YES”, all values are reset to 0 (except for PLACED parameter that is reset to 15 000).

SUB SCREENS **8.3-4** **SCALE 1-2**

```
ALARM              Scale X
=========================================

1 ----------> Actual Information
2 ----------> Scale History
3 ----------> New Flock
4 ----------> Configuration
5 ----------> Calibration
6 ----------> Growth Curve
```

1. This parameter is used to access the corresponding **SCALE X - ACTUAL INFORMATION (8.3-4.1)** screen.

2. This parameter is used to access the corresponding **SCALE X - HISTORY (8.3-4.2)** screen.

3. This parameter is used to access the corresponding **SCALE X - NEW FLOCK (8.3-4.3)** screen.

4. This parameter is used to access the corresponding **SCALE X – CONFIGURATION (8.3-4.4)** screen.

5. This parameter is used to access the corresponding **SCALE X – CALIBRATION (8.3-4.5)** screen.

6. This parameter is used to access the corresponding **SCALE X - GROWTH CURVE (8.3-4.6)** screen.

SUB SCREENS 8.3-4.1 SCALE X - ACTUAL INFORMATION

```
ALARM     Scale X – Actual Information
=========================================

                        Age:        0 day
            Actual Weight:    1.892 lb
              Last Weight:    1.756 lb
            Target Weight:       47 lb
           Average Weight:       47 lb
            Total Weighed:        5
                     Gain:        7 lb
       Standard Deviation:  0.0005 lb
              Uniformity:       10 %
```

1. This parameter displays the flock's actual age. The age is incremented each time the date changes. The actual age is displayed from day 0 to 500.

2. This parameter displays the actual weight read by the WSM-1 module. The scale must have been calibrated to obtain a significant value. The actual weight is displayed to the nearest 0.001 pound from -9.998 to 9.999 pounds.

3. This parameter displays the last weight recorded by the WSM-1 module. For a weight to be recorded, it must be within the respective target weight +/- the corresponding tolerance, adjusted in the **SCALE X – CONFIGURATION (8.3-4.4)** screen. The weight recorded by the WSM-1 module is the difference between the last stable weight and the new actual weight. Ex: If two birds weighing 0.500 pound each are already on the scale and a third bird weighing 0.630 pound is added, the WSM-1 module will record a weight of 0.630 pound, but the actual weight displayed will be 1.630 pound. If no correct weight has been recorded, this parameter will display "---". Otherwise, the last weight will be displayed to the nearest 0.001 pound from 0.001 pound to 9.999 pounds.

4. This parameter displays the target weight of the actual day. The target weight is determined by the growth curve if the "Target Weight Chart" method is used. If the "Evolution Of Weight" method is used, the target weight is equal to yesterday's average weight (or the target weight adjusted by the user when flock is started) plus the respective "Add Weight" adjusted in the **SCALE X - GROWTH CURVE (8.3-4.6)** screen. If the flock of the respective scale has not been started, this parameter will display "---". Otherwise, the target weight is displayed to the nearest 0.001 pound to 9.999 pounds.

5. This parameter displays the average weight of the current day. If there has not been any bird weights recorded today, this parameter displays "---". Otherwise, the average weight is displayed to the nearest 0.001 pound from 0.001 to 9.999 pounds.

6. This parameter displays the amount of bird weights recorded by the WSM-1 module during the current day. For a weight to be recorded, it must be within the respective target weight +/- the corresponding tolerance, adjusted in the **SCALE X – CONFIGURATION (8.3-4.4)** screen. The WSM-1 module can record up to 1024 birds weighed in one day.

7. This parameter displays the gain calculated for the respective scale. The gained weight is the difference between today's average weight and yesterday's average weight. If a scale has not recorded an average weight during the actual day of the preceding one, the gain cannot be calculated and the respective parameter will display "---". Otherwise, the gain value is displayed to the nearest 0.001 pound from -9.998 to 9.999 pounds.

8. This parameter displays the standard deviation calculated by the respective scale. The standard deviation is a measure of the uniformity of a group of birds. For example, if a standard deviation of 3.000 pounds is calculated, this indicates that 68% of the birds have a weight within 3.000 pounds of the average weight. This value also indicates that 95% have a weight within 6.000 pounds (standard deviation x2) of the average weight. If less than 2 birds have been weighed during the current day, this parameter will display "---". Otherwise, the standard deviation is displayed to the nearest 0.0001 pound to 3.3000 pounds.

9. This parameter displays the uniformity calculated by the respective WSM-1 module for the current day. The uniformity represents the percentage of the birds that are within 10% of the target weight. If no birds have been weighed during the current day, this parameter displays "----". Otherwise, the uniformity is displayed to the nearest 1% from 0% to 100%.

SUB SCREENS **8.3-4.2** **SCALE X - HISTORY**

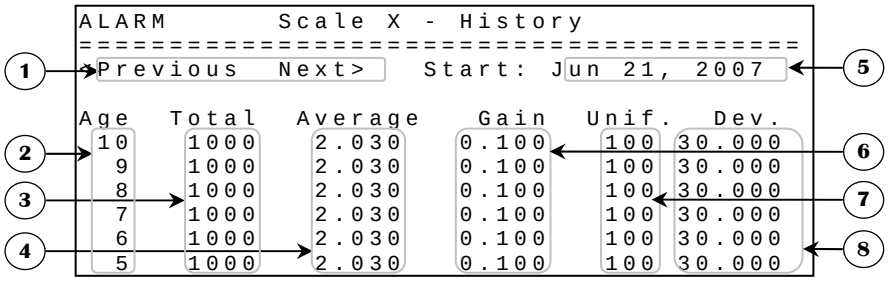

Each history may record up to 250 days. Once the 250 days have been recorded, the respective scale's history will no longer be updated. To reset the history, a new flock must be started.

1. These parameters are used to navigate through the different pages of the history. When the SELECT button is pressed while the cursor is positioned on this parameter, the preceding page (or the following one) will be displayed. The history is divided in pages according to 25-day screens.

2. These parameters display the age the birds had when the data of the same line was recorded. The data is displayed according to the age in descending order. These values are displayed to the nearest day from day 0 to 500.

3. These parameters display the amount of birds weighed by the WSM-1 module for the corresponding age, indicated immediately to the left of the corresponding parameter. These values will vary from 0 to 1024 birds weighed.

4. These parameters display the average weight at the corresponding age. If there has not been any bird weights recorded during the respective day, the respective parameter will display "---". Otherwise, the average weight is displayed to the nearest 0.001 pound from 0.001 to 9.999 pounds.

5. This parameter displays the date at which the displayed flock was started. If the flock of the respective scale has not been started, the message "Not Started" will appear instead of this date.

6. These parameters display the gain calculated at the corresponding age. If a scale has not recorded an average weight during the respective day of the preceding one, the gain cannot be calculated and the respective parameter will display "----". The gain value is displayed the nearest 0.001 pound from -9.998 to 9.999 pounds.

7. These parameters display the uniformity calculated at the corresponding age. The uniformity represents the percentage of the birds that are within 10% of the target weight. If no birds have been weighed during the corresponding day, the respective parameter will display "----". Otherwise, the uniformity is displayed to the nearest 1% from 0% to 100%.

8. These parameters display the standard deviation calculated at the corresponding age. The standard deviation is a measure of the uniformity of a group of birds. For example, if a standard deviation of 3.000 pounds is calculated, this indicates that 68% of the birds have a weight within 3.000 pounds of the average weight. This value also indicates that 95% have a weight within 6.000 pounds (standard deviation x2) of the average weight. If no birds have been weighed during the corresponding day, the respective parameter will display "----". Otherwise, the standard deviation is displayed to the nearest 0.001 pound from 0.000 pounds to 3.300 pounds.

SUB SCREENS **8.3-4.3** **SCALE X - NEW FLOCK**

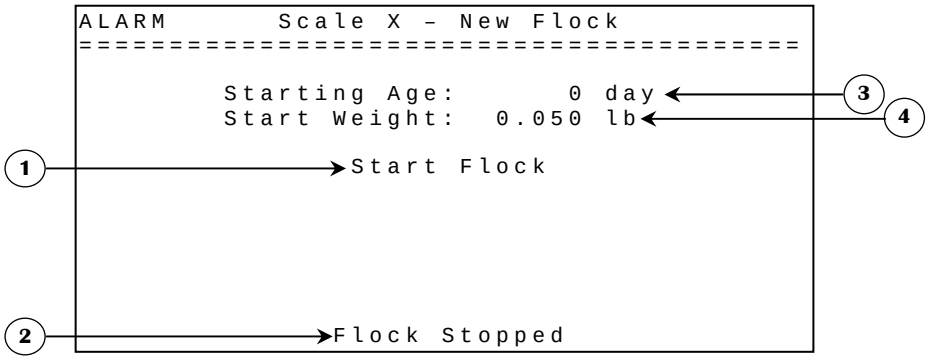

1. This parameter is used to start of stop a flock for the respective scale. When the SELECT button is pressed while the cursor is positioned on this parameter and no flock is started, a confirmation message will appear, warning the user that all data and histories will be reinitialized. If a flock is running, pressing SELECT when the cursor is on this parameter will stop the flock.

2. This parameter displays the actual state of the respective scale's flock or the result of the flock starting operation. When a confirmation question is satisfied, the control will display the result of the flock staring operation instead of the flock status. The possible results of the operation are: "Initializing", "Scale Busy" or "Scale Not Resp.". The last two messages indicate a problem occurred during the initialization. At this point, the user must attempt to start the flock once again. The message "Initializing" indicates that the flock starting operation was successful. If communication is maintained throughout the initialization process, the message "Flock Running" will be displayed to indicate the operation was completed. If no flock starting operation has been performed lately, this parameter will display the flock status, which is either "Flock Running" or "Flock Stopped".

3. This parameter allows the user to set the birds' age when the flock is started. When a flock is started, its actual age will be set to this value. This parameter is adjusted in 1-day increments from day 0 to day 249.

4. This parameter allows the user to set the birds' weight when the flock is started. When a flock is started, its target weight will be set to this value if the "Evolution Of Weight" method is used. When the "Target Weight Chart" method is used, this parameter will not appear. The start weight is adjusted in 0.001-pound increments from 0.010 to 9.999 pounds.

SUB SCREENS **8.3-4.4** **SCALE X - CONFIGURATION**

```
ALARM      Scale X - Configuration
========================================

Tgt Weight Method: Target Weight Chart

                   Tolerance
                   Low / High

                   25% / 25%
```

1 → Tgt Weight Method

3 → 25% / 25%

1. This parameter is used to select the method used to determine the target weight. If the "Evolution Of Weight" method is used, the target weight will be equal to yesterday's average weight (or the target weight adjusted by the user when flock is started) plus the respective "Add Weight" adjusted in the **SCALE X - GROWTH CURVE (8.3-4.6)** screen. If the "Target Weight Chart" method is used, the target weight for a given age will be determined by the corresponding weight adjusted in the growth curve of the respective scale. This parameter may only be adjusted when all scales are deactivated.

2. These parameters are used to set the valid weight limits for each scale. To make sure all weights recorded are valid, the scale will only record weights that are within the actual target weight - `TOLERANCELOW` and the actual target weight + `TOLERANCEHIGH`. This parameter is adjusted in 1% increments from 20% to 40%.

SUB SCREENS 8.3-4.5 SCALE X - CALIBRATION

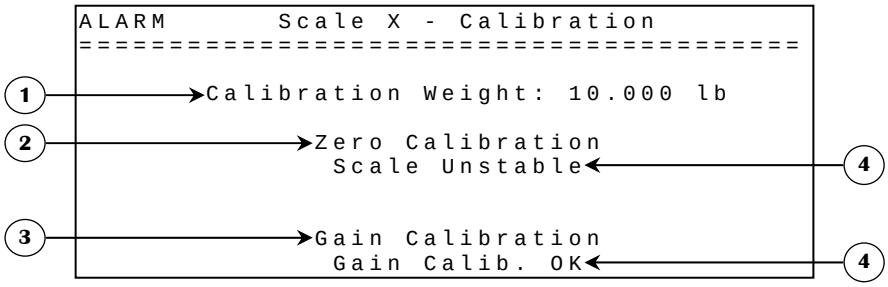

1. This parameter allows the user to set the weight used for the calibration process. When calibrating the gain, the weight on the scale must be exactly the same as the one set here. The heavier the weight is, the better the precision will be. This parameter is adjusted in 0.001-pound increments from 0.001 to 22.000 pounds.

2. This parameter allows the user to start a calibration process that will determine the weight at which the scale will consider the weight to be zero pounds. To correctly evaluate the weight on the scale, the exact weight read when nothing is on the scale must be known. The scale must be emptied of all matter and the SELECT button pressed when the cursor is positioned on this parameter. At this moment, the message located immediately below this parameter will appear to indicate the status of the zero calibration sequence. Once the zero calibration has been completed, the gain calibration parameter will appear.

3. This parameter allows the user to start a calibration process that will determine the gain of the scale. To correctly evaluate the gain of the scale, the variation of the electrical signal according to two known weights must be known; i.e. weight when the scale is empty and the CALIBRATIONWEIGHT. A weight precisely equal to the calibration weight must be placed on the scale and the SELECT button pressed to start a gain calibration sequence. At this moment, the message located immediately beneath this parameter will appear to indicate the status of the gain calibration.

3. These parameters display the actual calibration status. When the SELECT button is pressed to start a calibration sequence, the message located beneath this parameter will appear immediately. The first message to appear normally should be “Calibrating”, indicating that the operation has been started. If the control could not communicate with the WSM-1 module, the message “Scale Not Resp.” will be displayed. If another operation is already in progress, the message “Scale Busy” will appear. If the calibration sequence has been started, but the signal is unstable for more than two minutes, the message “Scale Unstable” will be the one shown. All error situations will ask the user to repeat the process by displaying the “Restart Calib.” Beneath the appropriate error message. When the WSM-1 receives a stable signal for a certain period of time, the calibration will be successful and the message “Zero Calib. OK” or “Gain Calib. OK” will appear.

SUB SCREENS **8.3-4.6** **SCALE X - GROWTH CURVE**

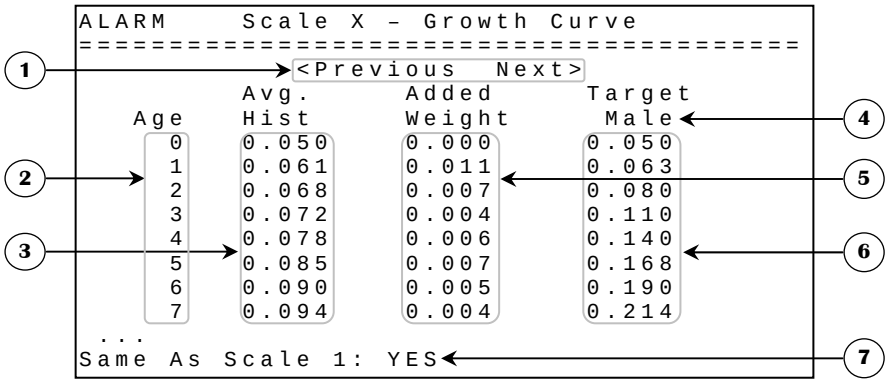

1. These parameters are used to navigate through the different pages of the respective scale's growth curve. When the SELECT button is pressed while the cursor is positioned on this parameter, the preceding page (or the following one) will be displayed. The history is divided in 50-day pages.

2. These parameters display the age at which the data of the same line was recorded. The ages displayed in this screen are always from day 0 to day 249 in ascending order.

3. These parameters display the average weight of the corresponding age, indicated on the left of these parameters. If no birds have been weighted for the corresponding day, these parameters will display "----". Otherwise, the average weight is displayed to the nearest 0.001 pound from 0.001 to 9.999 pounds.

4. This parameter allows the user to choose the target weight chart that will be used. There are two pre-programmed charts with typical weights for male and female birds. The user can choose which chart will be used by adjusting this parameter and by pressing the SELECT button while still positioned on this same parameter. At this moment, the weights of the chart will be updated. There is one chart for male birds and one for female birds for each scale.

5. These parameters are used to calculate the target weight when the "Evolution Of Weight" method is chosen in the **SCALE X - CONFIGURATION (8.3-4.4)** screen. If the "Target Weight Chart" method is used, these parameters will not be visible. These values will be added to the average of the corresponding day to define the new target weight for the actual day. Each value should represent the anticipated weight gain for the respective day. Each parameter is adjusted in 0.001-pound increments from 0.000 to 0.999 pounds.

6. These parameters allow the user to adjust the target weights of a flock. Each weight can be individually adjusted to allow the user to create his customized target weight chart. If the "Evolution Of Weight" method is chosen in the **SCALE X - CONFIGURATION (8.3-4.4)** screen, this chart will only be used as a reference if the user desires so. However, if the "Target Weight Chart" method is chosen, this chart will determine the target weight of a given age. Each target weight is adjusted in 0.001-pound increments from 0.000 to 9.999 pounds.

7. This parameter, available only for scale 2, is used to copy all of scale 1's chart values in the scale 2's chart. If this parameter is set to "Yes", scale 1's chart values will be applied to scale 2's chart and these values will no longer be adjustable. To readjust the chart actually displayed, this parameter must be set to "No".

SCREEN 9 **LIGHT SCHEDULE & CLOCKS**

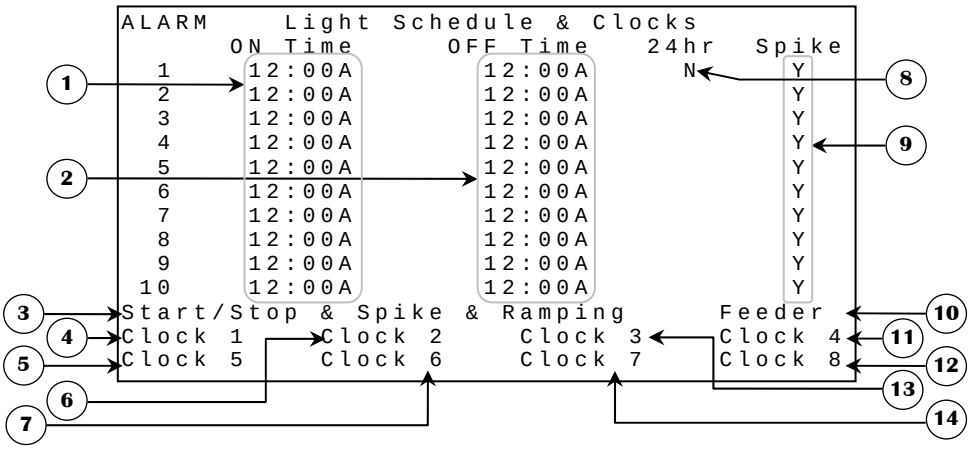

Some parameters may not appear if their corresponding option is not activated. To verify these options, refer to the **SYSTEM CONFIGURATION (12.5)** and **OUTPUT CONFIGURATION (12.6)** screens.

1. These parameters are used to establish the beginning of a light cycle. When the time of day reaches the `ON TIME` of a cycle selected in `SCHEDULE` of the active period, lights will be activated. **Light cycles must not overlap for proper light behavior.** A light cycle will end when the time of day reaches its `OFF TIME`. These parameters are adjusted from 12:00A to 11:59P.

2. These parameters are used to establish the end of an activation period. These parameters are adjusted in 1-minute increments from 12:00A to 11:59P. When the time of day reaches the `OFF TIME` of a cycle selected in `SCHEDULE` of the active period, lights have reduced their intensity from their actual intensity to 0% throughout the `START&STOP` time. **Light cycles must not overlap for proper light behavior.** See **LIGHT RAMPING (9.1)** screen for modulation and ramping adjustments.

3. This parameter is used to access the **LIGHT RAMPING (9.1)** screen.

4. This parameter displays the name of the first clock output and is used to access the **CLOCK 1 (9.3.1)** screen.

5. This parameter displays the name of the fifth clock output and is used to access the **CLOCK 5 (9.3.5)** screen.

6. This parameter displays the name of the second clock output and is used to access the **CLOCK 2 (9.3.2)** screen.

7. This parameter displays the name of the sixth clock output and is used to access the **CLOCK 6 (9.3.6)** screen.

8. This parameter is used to set cycle 1 as a 24-hour cycle. If this parameter is set to “Y” and the active period uses cycle 1, lights will activate as soon as that period begins. Lights will remain active as long as the period is active. The 24-hour cycle will end at 11:59P of the last day of the period.

9. These parameters allow the user to set which light cycle will use spiking. When a parameter `SPIKE` is set to “Y”, the respective cycle will use all light modulation parameters and spike throughout its activation time. In addition to this parameter, both `HI TIME` and `START&STOP` of the active period must be set to a value other that “OFF” for light spiking to be effective. A cycle that does not spike will not use `HI INTENS`, `HI TIME` and `LO/HI FIRST` parameters. See **LIGHT RAMPING (9.1)** screen for modulation and ramping adjustments.

10. This parameter is used to access the **FEEDER SCHEDULE (9.2)** screen.

11. This parameter displays the name of the fourth clock output and is used to access the **CLOCK 4 (9.3.4)** screen.

12. This parameter displays the name of the eighth clock output and is used to access the **CLOCK 8 (9.3.8)** screen.

13. This parameter displays the name of the third clock output and is used to access the **CLOCK 3 (9.3.3)** screen.

14. This parameter displays the name of the seventh clock output and is used to access the **CLOCK 7 (9.3.7)** screen.

SUB SCREEN 9.1 LIGHT RAMPING

```
ALARM            Light Ramping
=========================================
Ramping Day: OFF                     ADJUST

Period           1      2      3      4      5
Start Day        0      3      7     14     21
Schedule    ----1  ---23  ---34  --456  ---56
Sch 6-10    67890  ---23  ---34  --456  ---56
Lo Intens      100    100     60     50     40
Lo Time         60     60     60     70     80
Hi Intens      100    100     75     65     50
Hi Time         10     10     15     15     15
Start&Stop      10     10     10     10      5
Lo/Hi First     Lo     Lo     Lo     Lo     Lo

Period           6      7      8      9     10
Start Day       28     35     42     56     77
Schedule    ---67  ---78  ---78  --789  ----0
Sch 6-10    67890  ---23  ---34  --456  ---56
Lo Intens       35     35     32     40     50
Lo Time         90    120    120     80     60
Hi Intens       40     40     35     40     50
Hi Time         20     20     15     15     10
Start&Stop       5      5      5      5      5
Lo/Hi First     Hi     Hi     Hi     Hi     Lo
```

Some parameters may not appear if their corresponding option is not activated. To verify these options, refer to the **SYSTEM CONFIGURATION (12.5)** screen.

1. This parameter is used to adjust the ramping day for lights. If this parameter is set to “OFF”, light ramping will not be performed and period 1 will always be the active period. If this parameter is set to a value other than “OFF”, it will determine the active period and will be incremented every time the time of day changes from 11:59P to 12:00A. When this parameter reaches the `START DAY` of a period, that period will become the active period. This parameter is adjusted in 1-day increments from “OFF”, day 0 to day 365.

2. This parameter displays the actual light activity state and is used to suspend light activity in order to perform adjustments. If SELECT is pressed when the cursor is on this parameter and “AUTO” is displayed, light will shut off and will no longer check activation settings. At this moment, the user may perform all adjustments without activating lights erratically. If SELECT is pressed when the cursor is on this parameter and “ADJUST” is displayed, light will activate according to user settings once again.

3. These parameters are used to set the day at which the respective period will become the active period. When the `RAMPING DAY` reaches one of these parameters, the respective period will become the active period and all of its parameters will be used. A period may only change when no light cycles are active. If a light cycle is active when the period would change, that cycle will be completed before the period is changed. When the `RAMPING DAY` is less than all of these parameters, lights will be deactivated. When the `RAMPING DAY` is set to “OFF”, period 1 will always be the active period. **All of these settings must be in chronological order for proper light behavior**. These parameters are adjusted in 1-day increments from day 0 to day 365.

4. These parameters are used to select the light cycles that will be used for the respective period. When a given period becomes the active period, all cycles selected in these parameters will be verified. Every time the `ON TIME` of a selected cycle is reached, lights will activate and every time the `OFF TIME` of a selected cycle is reached, lights will deactivate. When less than five cycles are wanted, select a dash ("-") for all cycles that are not wanted. These parameters are adjusted in 1-cycle increments from "-", cycle 1 to cycle 10.

5. These parameters are used to establish the respective period's low intensity. When the time of day reaches the `ON TIME` of a cycle selected in `SCHEDULE` of the active period, light intensity will modulate from 0% to this value if `LO/HI FIRST` is set to "Lo", if `SPIKE` is set to "N" or if `HI TIME` is set to "OFF". Light will go directly to this intensity when the time of day reaches the `ON TIME` of an active cycle and `START&STOP` is set to "OFF". If light spiking is used, lights will modulate from `HI INTENS` to this intensity throughout the `START&STOP` once the `HI TIME` is completed. These parameters are adjusted in 1% increments from 0% to 100%.

6. These parameters are used to establish the amount of time the light intensity will stay at `LO INTENS`. When light spiking is used, every time lights reach `LO INTENS`, they will remain at that intensity for this amount of time. These parameters are adjusted in 1-minute increments from 1 minute to 900 minutes.

7. These parameters are used to establish the respective period's high intensity. When the time of day reaches the `ON TIME` of a cycle selected in `SCHEDULE` of the active period, light intensity will modulate from 0% to this value if `LO/HI FIRST` is set to "Hi", if `SPIKE` is set to "Y" and if `HI TIME` is not set to "OFF". If light spiking is not used, this intensity will never be taken. If light spiking is used, lights will modulate from `LO INTENS` to this intensity throughout the `START&STOP` once the `LO TIME` is completed. These parameters are adjusted in 1% increments from 0% to 100%.

8. These parameters are used to establish the amount of time the light intensity will stay at `HI INTENS`. When light spiking is used, every time lights reach `HI INTENS`, they will remain at that intensity for this amount of time. If one of these parameters is set to "OFF", the respective period will not use light spiking, regardless of other settings. These parameters are adjusted in 1-minute increments from 1 minute to 900 minutes.

9. These parameters are used to establish all the light-modulation times for the respective period. Every time the light intensity modulates either from the lower intensity (`LO INTENS` or OFF) to the higher intensity (`LO INTENS` or `HI INTENS`) or vice-versa, it will do so according to the time set here. If one of these parameters is set to "OFF", the respective period will not use light spiking. Instead, they and will go directly to `LO INTENS` and remain there until the end of the cycle. These parameters are adjusted in 1-minute increments from "OFF", 1 minute to 20 minutes.

Ex: `START&STOP` = 1 minute;
`LO INTENS` = 25%;
`LO TIME` = 10 minutes;
`HI INTENS` = 75%;
`HI TIME` = 3 minutes;
`ON TIME` = 3:00A;
`OFF TIME` = 5:00A;
At 2:59A, the light if OFF,
First step...
- Between 3:00A and 3:01, the light increases its intensity from 0% to 25%.

Others steps…
- The lights stay at 25% for 10 minutes and then the light increases their intensity from 25% to 75% for 1 minute to stay at 75% for 3 minutes. When 3 minutes are elapsed then light intensity decreases from 75% to 25% for 1 minute.

These steps continue cycling like a recycle timer until the clock reaches 4:59A, lights will then decreases their intensity from where it was at 4:59A to 0%.

Important Notes:

- All settings must be set outside all activation periods or when light activity is suspended and all activation periods can't overlap otherwise unwanted light conditions may happen.
- At the return of a power failure, the lights will restart at the beginning of the cycle and will stop at respective `OFF TIME`.
- If the light dimmer option is set to "N" in **SYSTEM CONFIGURATION (12.5)** screen, lights will be ON/OFF lights and will not any spiking related parameters.
- If lights `START&STOP` is set to "OFF" while the light dimmer option is set to "Y" in **SYSTEM CONFIGURATION (12.5)** screen, when in an activation period, variable lights demand will equal to the `LIGHT LO INTENSITY` parameter.

SUB SCREENS 9.2 FEED OUTPUT

```
ALARM            Feed Schedule
=========================================
        ON Time        OFF Time     Used
  1     12:00A         12:00A        Y
  2     12:00A         12:00A        Y
  3     12:00A         12:00A        Y
  4     12:00A         12:00A        Y
  5     12:00A         12:00A        -
  6     12:00A         12:00A        -
  7     12:00A         12:00A        -
  8     12:00A         12:00A        -
  9     12:00A         12:00A        -
 10     12:00A         12:00A        -
 11     12:00A         12:00A        -
 12     12:00A         12:00A        -
```

1. These parameters are used to establish the beginning of an activation period. These parameters can be adjusted to any value from 12:00A to 11:59P.

2. These parameters are used to establish the end of an activation period. These parameters can be adjusted to any value from 12:00A to 11:59P.

3. These parameters allow the user to set which periods will be active or not. When a parameter USED is set to “Y”, the respective activation period will be active, otherwise the respective activation period will not be considered.

SUB SCREENS 9.3.1-4 CLOCK 1-4 OUTPUT

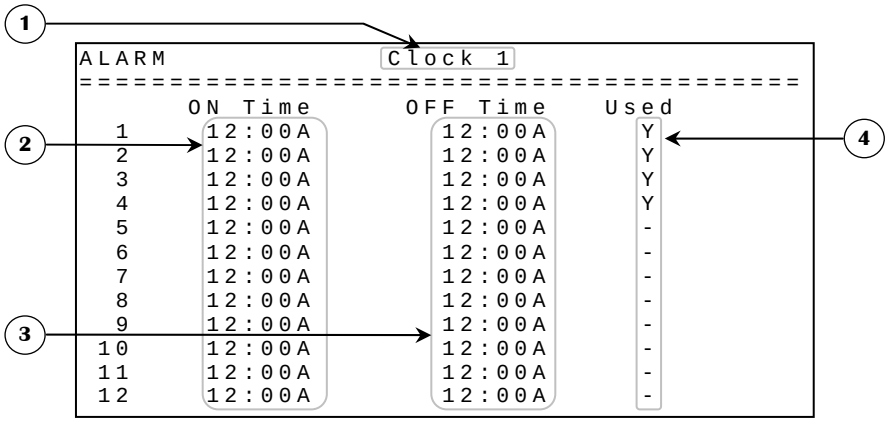

1. This title will indicate the name of the clock output currently being scheduled. The available output names are: Clock 1-4 (unique reference number), Hen Feed Output, Water Output, CC Light Output and Fill System Output.

2. These parameters are used to establish the beginning of an activation period. These parameters can be adjusted to any value from 12:00A to 11:59P.

3. These parameters are used to establish the end of an activation period. These parameters can be adjusted to any value from 12:00A to 11:59P.

4. These parameters allow the user to set which periods will be active or not. When a parameter USED is set to “Y”, the respective activation period will be active, otherwise the respective activation period will not be considered.

SUB SCREENS 9.3.5-6 CLOCK 5-6 OUTPUT

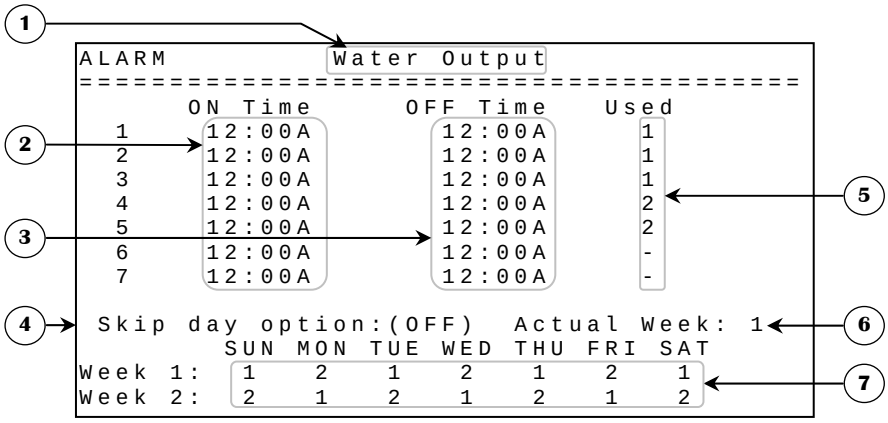

1. This title will indicate the name of the clock output currently being scheduled. The available output names are: Clock 5-6 (unique reference number), Hen Feed Output, Water Output, CC Light Output and Fill System Output.

2. These parameters are used to establish the beginning of an activation period. These parameters can be adjusted to any value from 12:00A to 11:59P.

3. These parameters are used to establish the end of an activation period. These parameters can be adjusted to any value from 12:00A to 11:59P.

4. This parameter is used to activate or deactivate the skip day option. If this parameter is set to ON, other skip day parameters will appear and an activation period will be used only if the corresponding `USED` option is set to the same number as the one set for the actual weekday of the actual week.

5. These parameters allow the user to set which periods will be active or not and on which day they will be active. When one of these parameters is set to "-", the respective activation period will be inactive at all times. When one of these parameters is set to 1 or 2 and the `Skip Day Option` is set to ON, the respective activation period will be used when the option of the actual day and week are set to the same number. When one of these parameters is set to 1 or 2 and the `Skip Day Option` is set to OFF, the respective activation period will be used every day.

6. This parameter displays the actual week used with the skip day function.

7. These parameters allow the user to set the periods that will be used for each day of the two-week period. When one of these parameters is set to 1 or 2, the activation periods that have their `USED` option set to the same number will be active for that day. When one of these parameters is set to "-", no activation periods will be active for that day.

SUB SCREENS 9.3.7-8 CLOCK 7-8 OUTPUT

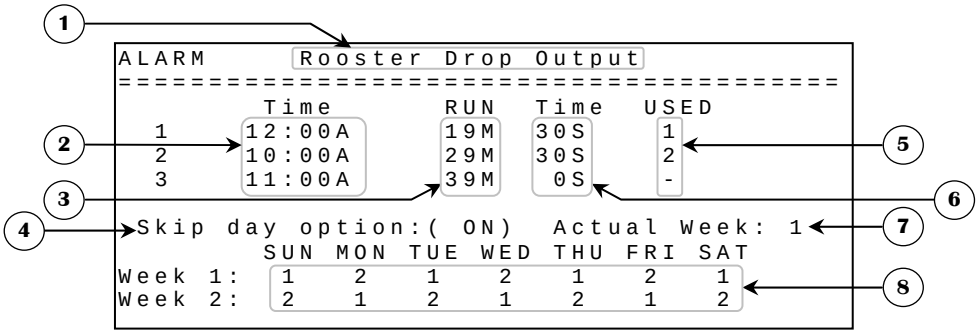

1. This title will indicate the name of the clock output currently being scheduled. The available output names are: Clock 7-8 (unique reference number), Rooster Raise Output and Rooster Drop Output.

2. These parameters are used to establish the beginning of an activation period. These parameters can be adjusted to any value from 12:00A to 11:59P.

3. These parameters are used to establish the minutes of the run time of the activation period. These parameters are adjusted in 1-minute increments from 0 to 99 minutes.

4. This parameter is used to activate or deactivate the skip day option. If this parameter is set to ON, other skip day parameters will appear and an activation period will be used only if the corresponding `USED` option is set to the same number as the one set for the actual weekday of the actual week.

5. These parameters allow the user to set which periods will be active or not and on which day they will be active. When one of these parameters is set to "-", the respective activation period will be inactive at all times. When one of these parameters is set to 1 or 2 and the `Skip Day Option` is set to ON, the respective activation period will be used when the option of the actual day and week are set to the same number. When one of these parameters is set to 1 or 2 and the `Skip Day Option` is set to OFF, the respective activation period will be used every day.

6. These parameters are used to establish the seconds of the run time of the activation period. These parameters are adjusted in 1-second increments from 0 to 59 seconds.

7. This parameter displays the actual week used with the skip day function.

8. These parameters allow the user to set the periods that will be used for each day of the two-week period. When one of these parameters is set to 1 or 2, the activation periods that have their `USED` option set to the same number will be active for that day. When one of these parameters is set to "-", no activation periods will be active for that day.

SCREEN **10** **HISTORY**

```
ALARM            History
=========================================
Probe History:  View  Clear All
Output History: View    Sure?   N
Alarm History:  View
```

1. This parameter is used to access the **PROBE HISTORY (10.1)** screen.

2. This parameter is used to access the **OUTPUT HISTORY (10.2)** screen.

3. This parameter is used to access the **ALARM HISTORY (11.2)** screen.

4. This parameter is used to clear all history values for all probes. Press the SELECT button on this parameter. A confirmation choice will then appear and cursor will be positioned on the confirmation choice. At this point, the confirmation choice is to confirm ("Y") or refuse ("N") the action of clearing all history values for all probes. Select your choice and press the SELECT button. If the choice was "Y", then all history values are erased.

5. This parameter is used to clear all history values for all outputs. Press the SELECT button on this parameter. A confirmation choice will then appear and cursor will be positioned on the confirmation choice. At this point, the confirmation choice is to confirm ("Y") or refuse ("N") the action of clearing all history values for all outputs. Select your choice and press the SELECT button. If the choice was "Y", then all history values are erased.

SUB SCREEN 10.1 PROBE HISTORY

```
ALARM          Probe History
=====================================
Type     Name                Daily   Reset
         Avg Temp            Data    Clear
Prb 1    Temp 1              Data    Clear
Prb 2    Temp 2              Data    Clear
Prb 3    Temp 3              Data    Sure?Y
Prb 4    Temp 4              Data    Clear
Prb 5    Temp 5              Data    Clear
Prb 6    Temp 6              Data    Clear
Prb 7    Temp 7              Data    Clear
Prb 8    Temp 8              Data    Clear
Prb 9    Temp 9              Data    Clear
Prb10    Temp 10             Data    Clear
Prb11    Outside             Data    Clear
Prb12    Breaker Temp        Data    Clear
Prb14    Feed1               Data    Clear
Prb15    Feed2               Data    Clear
Prb16    Water1              Data    Clear
Prb17    Water2              Data    Clear
         Humidity            Data    Clear
         Static Press        Data    Clear
```

1. These parameters display what kind of sensor is used for the respective probe emplacement. These parameters cannot be manually modified.

2. These parameters are used to access the acquisition data for each probe. By pressing the SELECT button on one of these parameters, control goes in a screen that lists all acquisition data for this respective probe. See example on next page.

3. These parameters are used to clear all values contained in the respective acquisition data screen. Press SELECT button on one of these parameters. A confirmation choice will then appear beside this parameter and cursor will be positioned on the confirmation choice.

4. These parameters are used to confirm ("Y") or refuse ("N") the action of clearing all values contained in this respective acquisition data screen. Select your choice and press the SELECT button. If the choice was "Y", then all acquisition values are erased and the cursor will be positioned on CLEAR parameter.

History example:

Average temperature and temperature probes

```
ALARM        History - Avg Temp
=========================================
DATE     AVG        MAX              MIN
05/07    71.2    71.4  10:41P     71.1   9:47P
05/06    71.3    71.3   9:47P     71.2   7:18P
05/05    69.9    70.2   6:00P     69.4  12:05P
```

Static pressure probe

```
ALARM  History - Static Pressure
=========================================
DATE     AVG        MAX            MIN
05/07   0.061   0.068  11:23P   0.056  10:27P
05/06   0.070   0.072   4:52P   0.068   6:54P
05/05   0.075   0.079   3:46P   0.071  10:16P
```

Feeder probe

```
ALARM       History - Probe 15
=========================================
DATE        LBS
05/07        0
05/06        5
05/05       12
```

Water probe

```
ALARM       History - Probe 16
=========================================
DATE     GALLONS
05/07        0
05/06        7
05/05        9
```

Humidity probe

```
ALARM        History - Humidity
=========================================
DATE      AVG        MAX            MIN
05/07      45     54  12:41P     36   7:23P
05/06      41     43   6:21P     44   2:48P
05/05      52     48   8:34P     54  11:43P
```

1. These parameters display the average of the data acquired in an entire day or since the beginning of the current day.

2. These parameters display the date of the specific acquisition line. At midnight a new acquisition line is added at the top of the list.

3. These parameters display the maximum data value acquired in a specific day.

4. These parameters display the daytime at which the maximum data value was acquired in a specific day.

5. These parameters display the daytime at which the minimum data value was acquired in a specific day.

6. These parameters display the minimum data value acquired in a specific day.

7. This parameter displays the daily total feeding time as read by feeder input. These parameters are displayed in lbs but the control keeps track of the seconds. In the case of the water history, this parameter displays the daily total of gallons counted.

SUB SCREEN 10.2 OUTPUT HISTORY

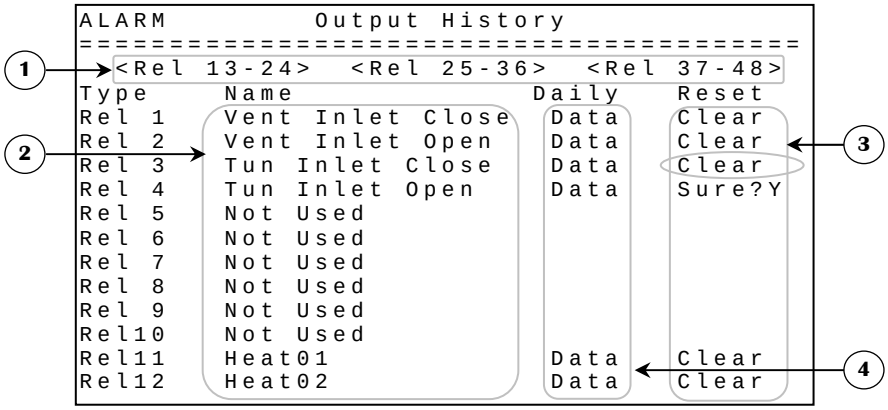

These screens show 4 groups of 12 relays in succession (relays 1-12, relays 13-24, relays 25-36, relays 37-48) for a total of 48 relays.

1. These parameters are used to display another series of 12 relays by pressing the SELECT button while on the appropriate parameter.

2. These parameters display what kind of output is used for the respective relay.

3. These parameters are used to clear all values contained in the respective acquisition data screen. To do so, press the SELECT button on one of these parameters. A confirmation choice will then appear and cursor will be positioned on the confirmation choice.

4. These parameters are used to access the acquisition data for each relay. By pressing SELECT while on one of these parameters, the control goes in a screen that lists all acquisition data for this respective relay. See example on next page.

History example:

Outputs

```
ALARM        History - Rel X
=====================================
DATE     ON TIME
05/07       2
05/06      34
05/05      47
```

1 → DATE column; 2 → ON TIME column

1. These parameters display the date of the specific acquisition line. When date changes, a new acquisition line is added at the top of the list.

2. These parameters display the daily total time that the respective output was ON. These parameters are displayed in minutes but the control keeps track of the seconds.

SCREEN **11** **ALARM**

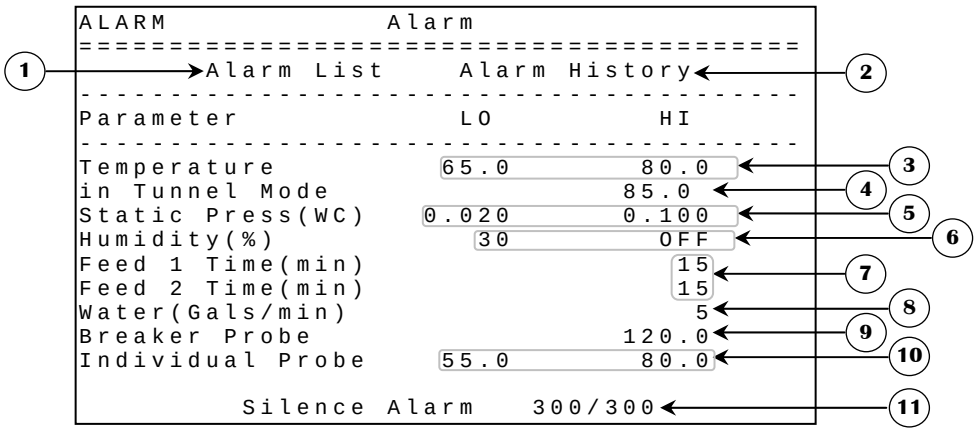

1. This parameter is used to access the **ALARM LIST (11.1)** screen.

2. This parameter is used to access the **ALARM HISTORY (11.2)** screen.

3. These parameters are used to establish the low and high temperature limits. Below `ALARM TEMPERATURE LO` limit or above `ALARM TEMPERATURE HI` limit, an alarm occurs. Both parameters are relative to the target but are displayed as absolute set points and are adjusted in 0.1°F increments from 32.0°F to 120.0°F.

4. This parameter is used to establish the high temperature limit when in tunnel mode. Above this limit, an alarm occurs. This parameter is adjusted in 0.1°F from 32.0°F to 120.0°F.

5. These parameters are used to establish the low and high-pressure alarm limits. When static pressure is below `LO ALARM SP`, the `LO ALARM DELAY` is activated. It is possible to deactivate the `LO ALARM SP` by setting it to OFF. The `LO ALARM SP` is adjusted in 0.001“WC increments from OFF, 0.000“WC to 0.100“WC. When pressure is above `HI ALARM SP`, the `HI ALARM DELAY` is activated. The `HI ALARM SP` is adjusted in 0.001“WC increments from 0.050“WC to 0.200“WC. These parameters can also be modified in **STATIC PRESSURE (2)** screen.

6. These parameters are used to establish the low and high humidity limits. When humidity sensor is below `ALARM HUMIDITY LO` limit or above `ALARM HUMIDITY HI` limit, an alarm occurs. Both parameters are adjusted in 1%RH increments from 0%RH to 99%RH. The `ALARM HUMIDITY HI` can also be set to OFF.

7. These parameters are used to set the delay that the respective feed system is allowed to run constantly before activating the alarm. The `ALARM FEED # TIME` is adjusted in 1-minute increments from OFF, 1 minute to 120 minutes. When this alarm occurs, feeder output will deactivate until this alarm is cleared in the **ALARM LIST (11.1)** screen.

8. This parameter establishes the water distribution limit in gallons per minute. Above this limit, an alarm occurs. The `ALARM WATER` is adjusted in 1-gallon increments from OFF, 1 gallon to 1000 gallons.

9. This parameter establishes the temperature limit for the breaker probe. Above this limit, an alarm occurs. The `ALARM BREAKER PROBE` is adjusted in 0.1°F from 32.0°F to 160.0°F.

10. These parameters are used to establish the low and high individual temperature limits. If a sensor selected to be individually alarmed (see the **PROBE CONFIGURATION (12.2)** screen) exceeds these limits, the alarm will be activated. Both parameters are adjusted in 0.1°F increments from 32.0°F to 120.0°F.

11. This parameter shuts off of the alarm for 5 minutes by pressing the SELECT button. A countdown will begin and time left will be shown under this parameter.

SUB SCREEN **11.1** **ALARM LIST**

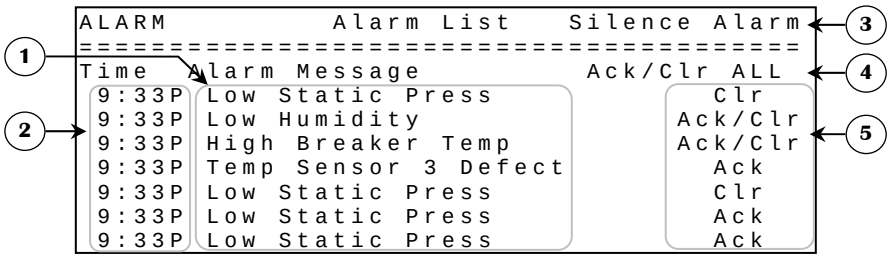

1. This column shows the alarms that have previously occurred. These alarm messages are listed in order. The first alarm shown is the latest one.

2. These parameters indicate the time at which the respective alarm occurred.

3. This parameter silences the alarm for 5 minutes by pressing the SELECT button.

4. This parameter is used to acknowledge and/or clear an alarm that has been triggered; this will reinitialize all alarm and warning conditions. To do so, press the SELECT button on this parameter. A confirmation choice will then appear and cursor will be positioned on the confirmation choice.

5. These parameters are used to acknowledge or clear an alarm that has been triggered. An alarm that has been triggered will display "Ack" until the alarm is acknowledged. This is done by pressing the SELECT button while positioned on the corresponding line. When this is done, the display will change to "Clr". If the user presses the SELECT button again while on the parameter, the alarm entry will disappear and the alarm condition will be reinitialized. If a situational alarm is no longer in effect or if the entry is a warning, the display will be "Ack/Clr" and pressing the SELECT button will both acknowledge and clear the alarm situation.

There are five types of alarm entries:

1- **Continuous alarms.** These alarms will activate the alarm relay and the ALARM message will appear when the condition is present and when the situation is corrected. The alarm entry must be acknowledged and cleared to deactivate the alarm relay and remove the ALARM message.

2- **Situational alarms.** These alarms will activate the alarm relay and the ALARM message will appear when the condition is present. When the situation is corrected, the alarm relay will deactivate and the ALARM message will appear. The alarm entry must be acknowledged and cleared to remove the ALARM message.

3- **Continuous warning.** These alarms will display the WARNING message when the condition is present and when the situation is corrected. The alarm entry must be acknowledged and cleared to deactivate the alarm relay and remove the WARNING message.

4- **Situational warning.** These alarms will display the WARNING message when the condition is present. The WARNING message will disappear when the situation is corrected.

5- **Event.** These entries are not alarms, but events that occurred at the given time and date.

SUB SCREEN 11.2 ALARM HISTORY

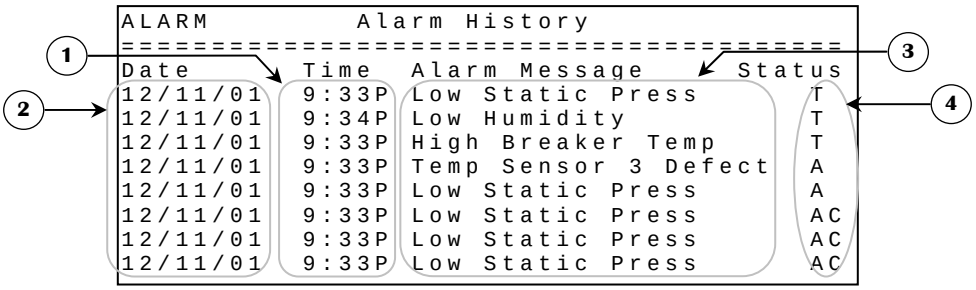


```
ALARM          Alarm History
=========================================
Date        Time   Alarm Message     Status
12/11/01    9:33P  Low Static Press    T
12/11/01    9:34P  Low Humidity         T
12/11/01    9:33P  High Breaker Temp    T
12/11/01    9:33P  Temp Sensor 3 Defect A
12/11/01    9:33P  Low Static Press     A
12/11/01    9:33P  Low Static Press     AC
12/11/01    9:33P  Low Static Press     AC
12/11/01    9:33P  Low Static Press     AC
```

1. These parameters indicate the daytime at which the respective alarm occurred or changed states.

2. These parameters indicate the date at which the respective alarm occurred or changed states.

3. This column shows the alarms that have occurred or changed states. These alarm messages are listed in chronological with the most recent.

4. This parameter displays the status of the alarm for the corresponding date and time. There are 4 possible statuses that may be displayed. “T” represents the time at which the alarm was triggered. “A” indicates the time at which the alarm was acknowledged, “C” represents the time at which the alarm was cleared and “AC” represents the time at which the alarm was acknowledged and cleared.

SCREEN **12** **MISCELLANEOUS**

```
ALARM          Miscellaneous
=========================================

1 ---> 1.Modes
2 ---> 2.Probe Configuration
3 ---> 3.Date-Clock-Password
4 ---> 4.Sensor Calibration
5 ---> 5.System Configuration
6 ---> 6.Output Configuration
7 ---> 7.Stir Fans
8 ---> 8.Curtains
9 ---> 9.Egg Room
```

Some parameters may not appear if their corresponding option is not activated. To verify these options, refer to the **SYSTEM CONFIGURATION (12.5)** and **OUTPUT CONFIGURATION (12.6)** screens.

1. This parameter is used to access the **MODES (12.1)** screen.

2. This parameter is used to access the **PROBE CONFIGURATION (12.2)** screen.

3. This parameter is used to access the **DATE-CLOCK-PASSWORD (12.3)** screen.

4. This parameter is used to access the **SENSOR CALIBRATION (12.4)** screen.

5. This parameter is used to access the **SYSTEM CONFIGURATION (12.5)** screen.

6. This parameter is used to access the **OUTPUT CONFIGURATION (12.6)** screen.

7. This parameter is used to access the **STIR FANS (12.7)** screen.

8. This parameter is used to access the **CURTAINS (12.8)** screen.

9. This parameter is used to access the **EGG ROOOM (12.9)** screen.

SUB SCREEN 12.1 **MODES**

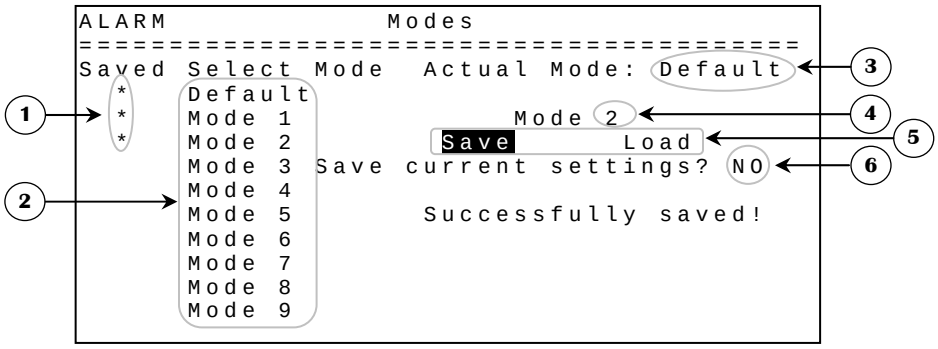

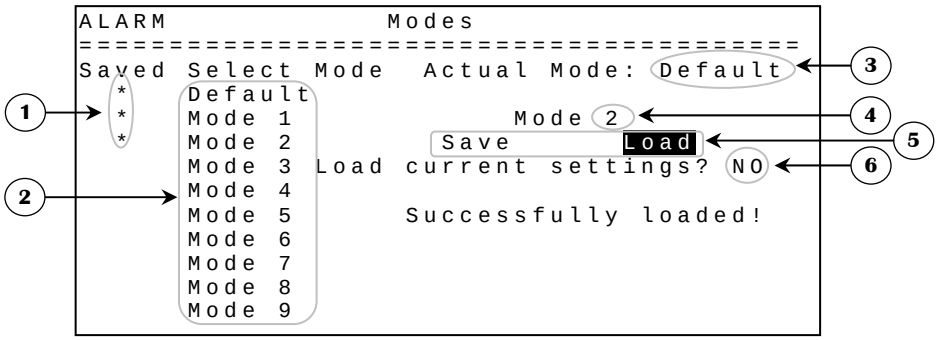

This version may not be merged with any of the preceding ones because of mode saving and loading modifications.

1. This column indicates which mode has settings in it by placing a star besides the mode.

2. This column is used to select which mode the user wants to load or save. By pressing the SELECT button, the option to load or save will appear on the right.

3. This parameter indicates the mode currently used.

4. This parameter displays the mode that will be saved or loaded.

5. These choices appear when a mode on the left is selected.

6. This parameter is used to validate the choices you have made (save or load the mode).

SUB SCREEN 12.2 PROBE CONFIGURATION

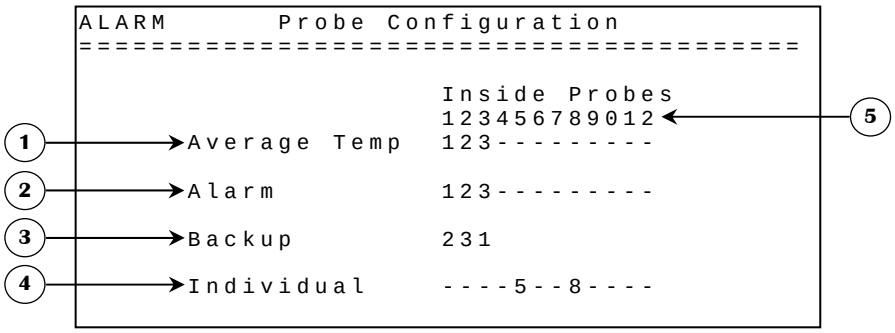

1. This sensor select is used to set which probes will be calculated in the average temperature.

2. This parameter gives the opportunity to activate the alarm for the respective sensor that is selected or deactivate it for the sensors that are not selected. A sensor selected in this parameter will be considered defective if it is 20.0°F below the `TARGET TEMP`.

3. These parameters allow the selection of an available backup sensor for each inside temperature sensor. This means that if an inside sensor becomes defective or is malfunctioning, the system will use the backup sensor instead. In the case that a backup sensor is defective too, the system will use the `TARGET TEMP` setting to simulate a sensor reading.

4. This parameter is used to activate or deactivate the individual alarm for the respective sensor. When a sensor selected in this parameter exceeds the individual probe limits of the **ALARM (11)** screen, the alarm will activate.

5. This parameter shows the possible inside probes that can be used for average temperature.

SUB SCREEN 12.3 DATE-CLOCK-PASSWORD

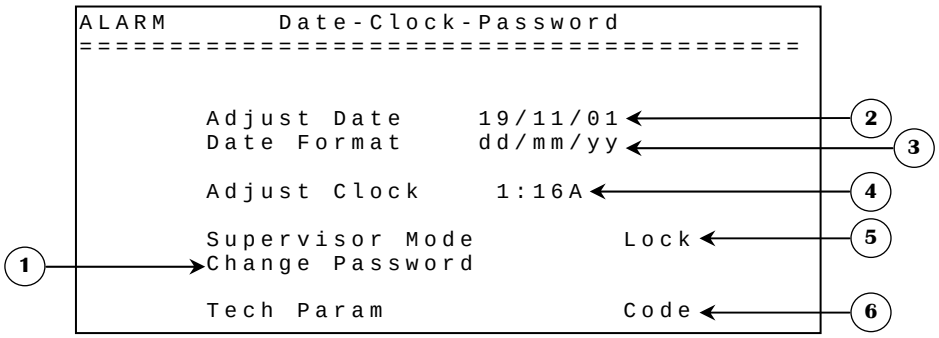

1. This parameter is used to change the current password. Press SELECT and the control will ask you to enter the new password. Enter the new password by using the − + and SELECT buttons. Once the new password is entered, the control will ask you to confirm the password by entering it once again. The control will display the message "Password changed" if the good password is entered or "Wrong password" if the 2 passwords are not identical.

2. This parameter is used to change the date of the system, refer to the parameter below for the date format.

3. This parameter is used to change the date format used by the system. There are 3 different possible formats, "mm/dd/yy", "dd/mm/yy" and "yy/mm/dd".

4. This parameter is used to change the time. Hours and minutes are incremented separately. Hours are adjusted in 1-hour increments from 12:00A to 11:00P. Minutes are adjusted in 1-minute increments from 0 minutes to 59 minutes.

5. This parameter is used to display the status of the supervisor mode and is also used to lock and unlock the supervisor mode. This code is entered by pressing the SELECT button and then using the − + buttons, enter the first number of the password and press the SELECT button; then enter the second number and press SELECT and so on. The status will change if the good password is entered. Otherwise the message "wrong password" will appear.

6. This parameter is reserved for technical support personnel.

SUB SCREEN 12.4 SENSOR CALIBRATION

```
ALARM        Sensor Calibration
=================================================
Sensor                Adjust      Actual
Temp 1                 0.0         75.0
Temp 2                 0.0         75.0
Temp 3                 0.0         75.0
Temp 4                 0.0         75.0
Temp 5                 0.0         75.0
Temp 6                 0.0         75.0
Temp 7                 0.0         75.0
Temp 8                 0.0         75.0
Temp 9                 0.0         75.0
Temp 10                0.0         75.0
Outside                0.0         75.0
Breaker T              0.0         75.0
Static Press(WC)     0.000        0.150
Humidity(%)              0           85
Feed1(Lbs/min)           3
Feed2(Lbs/min)           3
Water1(Gal/Pulse)        1
Water2(Gal/Pulse)        1
```

1. These parameters are used to adjust the reading of the respective probe. The adjustments are:

a. Increments of 0.1°F from -20.0°F to 20.0°F for temp sensors 1-12 (including Breaker and Outside sensors)

b. Increments of 0.001”WC from -0.150”WC to 0.150”WC for static pressure

c. Increments of 1RH% from -50RH% to 50RH%

d. Increments of 1 Lbs/min from 1 Lbs/min to 100 Lbs/min

e. Increments of 1 Gal/pulse from 1 Gal/pulse to 100 Gal/pulse

2. These parameters display the reading of the respective probe with the correction of the respective calibration parameter.

SUB SCREEN 12.5 **SYSTEM CONFIGURATION**

```
ALARM      System Configuration
=========================================
     Configuration: C2AVS111101M6
          Processor: 3
Inside Probes  12   Evap Cool/Fog    Y
Outside Probe  N    Static Press     Y
Breaker Probe  N    Humidity         Y
Heat/Brood     Y    Feed             2
Sidewall Fans  Y    Water            1
Stir Fans      N    Light Dimmer     Y
Tunnel Fans    Y    Curtains         N
Egg Room       N    Scale 1          Y
Unit ID        1    Scale 2          Y
RF Channel   OFF
RF Network 32656
RF Address 32656
```

This screen displays different control options (“Y” and “N”). If “Y” is shown beside a parameter, it means the parameter is used/activated and “N” means it’s deactivated.

1. This parameter establishes the number of inside probes that are available. This parameter affects all sensor selects. `OUTSIDE PROBE` and `BREAKER PROBE` affect this parameter, if `INSIDE PROBES` is set to 12 and `OUTSIDE PROBE` and `BREAKER PROBE` are both set to “N” and `OUTSIDE PROBE` setting is changed to “Y” then `INSIDE PROBES` will automatically drop to 11 inside probes. This parameter is adjusted by 1-probe increments from 2 inside probes to 12 inside probes (if `OUTSIDE PROBE` and `BREAKER PROBE` are set to “N”).

2. This parameter is used to activate or deactivate the outside probe (it will also activate or deactivate **STAT PRESS RAMPING OUTSIDE (2.2)** screen). This parameter can affect the `INSIDE PROBES` parameter. This parameter can be set to “Y” or “N”.

3. This parameter is used to activate or deactivate the breaker probe. This parameter can affect the `INSIDE PROBES` parameter.

4. This parameter is used to activate or deactivate the heater and brooder outputs. If this parameter is set to “Y”, then **HEAT & BROOD (3)** screen will be accessible (if at least one relay in **OUTPUT CONFIGURATION (12.6)** screen is correctly associated to one of these respective outputs) and all these outputs can work normally. If this setting is set to “N”, then **HEAT &BROOD (3)** screen will not be accessible and all relays associated to these outputs in **OUTPUT CONFIGURATION (12.6)** screen will be reinitialized and not available.

5. This parameter is used to activate or deactivate the sidewall fan outputs. If this parameter is set to "Y", then **SIDEWALL FANS (4)** screen will be accessible (if at least one relay in **OUTPUT CONFIGURATION (12.6)** screen is correctly associated to one of these respective outputs) and all these outputs can work normally. If this setting is set to "N", then **SIDEWALL FANS (4)** screen will not be accessible and all relays associated to these outputs in **OUTPUT CONFIGURATION (12.6)** screen will be reinitialized and not available.

6. This parameter is used to activate or deactivate the stir fan outputs. If this parameter is set to "Y", then **STIR FANS (12.7)** screen will be accessible (if at least one relay in **OUTPUT CONFIGURATION (12.6)** screen is correctly associated to one of these respective outputs) and all these outputs can work normally. If this setting is set to "N", then **STIR FANS (12.7)** screen will not be accessible and all relays associated to these outputs in **OUTPUT CONFIGURATION (12.6)** screen will be reinitialized and not available.

7. This parameter is used to activate or deactivate the tunnel fan outputs. If this parameter is set to "Y", then **TUNNEL FANS (5)** screen will be accessible (if at least one relay in **OUTPUT CONFIGURATION (12.6)** screen is correctly associated to one of these respective outputs) and all these outputs can work normally. If this setting is set to "N", then **TUNNEL FANS (5)** screen will not be accessible and all relays associated to these outputs in **OUTPUT CONFIGURATION (12.6)** screen will be reinitialized and not available.

8. This parameter is used to activate or deactivate the egg room. If this parameter is set to "Y", **EGG ROOM (12.9)** screen will be accessible and the egg room heater and cooler outputs can work normally. If this setting is set to "N", then **EGG ROOM (12.9)** screen will not be accessible and all relays associated to egg room outputs will be reinitialized and not available.

9. This parameter is used to set the control ID. This number is used by the remote access software, to single out the control amongst the other ones.

10. This parameter is used to select one of the 16 frequencies of the WiFarm network or deactivates wireless communication mode. If this parameter is set to OFF, other wireless communication parameters will disappear. This parameter can be adjusted to OFF, 1 to 16.

11. This parameter is used to identify a WiFarm network. A WiFarm network is formed when the RF NETWORK is set to the same value as the RF ADDRESS of the RF communication card of the controller designated as the network master (ex. WebGate in most installations). Other controllers can join the existing network by adjusting RF NETWORK to the RF ADDRESS of that same network. To adjust this parameter, place the cursor on the digit you wish to change and use the [+] and [–] buttons to change the value. When RF CHANNEL is set to OFF, this parameter will disappear. This parameter can be adjusted to any value from 00000 to 39999.

12. This parameter displays the number (address) associated to the RF card inserted in the controller. A unique number is given to each RF card of the WiFarm network. There is a unique RF ADDRESS associated to each RF card. The RF ADDRESS also appears on the sticker present on the RF card. When RF CHANNEL is set to OFF, this parameter will disappear. The address can be any value from 0 to 32767.

13. This parameter is used to activate or deactivate the evaporative cooling cell and fogger outputs. If this parameter is set to “Y”, then **EVAP COOL/FOG (6)** screen will be accessible (if at least one relay in **OUTPUT CONFIGURATION (12.6)** screen is correctly associated to one of these respective outputs) and all these outputs can work normally. If this setting is set to “N”, then **EVAP COOL/FOG (6)** screen will not be accessible and all relays associated to these outputs in **OUTPUT CONFIGURATION (12.6)** screen will be reinitialized and not available (the pump relay setting is also affected by this parameter).

14. This parameter is used to activate or deactivate the static pressure sensor. It will also activate or deactivate **STATIC PRESSURE (2)** and **STAT PRESS RAMPING INSIDE (2.1)** screens.

15. This parameter is used to activate or deactivate the humidity sensor.

16. This parameter is used to adjust the number of feed counters used. At least one feed counter must be activated to use a feeder output. There may be up to 2 feed counters in the configuration.

17. This parameter is used to adjust the number of water counters used. There may be up to 2 water counters in the configuration.

18. This parameter is used to activate or deactivate the light dimmer. If this parameter is set to “Y”, then **LIGHT RAMPING (9.1)** screen will be accessible and light can work normally. If set to “N”, **LIGHT RAMPING (9.1)** screen will not be accessible and light will function as an on/off output.

19. This parameter is used to activate or deactivate the curtain outputs. If this parameter is set to “Y”, then **CURTAINS (12.8)** screen will be accessible (if at least one relay in **OUTPUT CONFIGURATION (12.6)** screen is correctly associated to one of these respective outputs) and all these outputs can work normally. If this setting is set to “N”, then **CURTAINS (12.8)** screen will not be accessible and all relays associated to these outputs in **OUTPUT CONFIGURATION (12.6)** screen will be reinitialized and not available.

20. This parameter is used to activate or not the scale 1 and his logics.

21. This parameter is used to activate or not the scale 2 and his logics.

SUB SCREEN 12.6

OUTPUT CONFIGURATION

```
ALARM      Output Configuration      TEST
==================================================
Output Type          NO/NC    Out#  Status
Vent Inlet Open      NO        1    OK
Vent Inlet Close     NO        2    OK
Tunnel Inlet Open    NO        3    CHOOSE CL
Tunnel Inlet Close   NO        0    NOT USED
Heat     1                    11    OK
Heat     2                    12    OK
Heat     3                    13    OK
Heat     4                    14    OK
Heat     5                    15    OK
Heat     5                    16    OK
Brood    5                     0    NOT USED
Brood    5                    17    CONFLICT
Heat     5                    17    CONFLICT
Heat    10                     0    NOT USED
Heat    10                     0    NOT USED
Heat    10                     0    NOT USED
Heat    13                     0    NOT USED
Heat    14                     0    NOT USED
Heat    15                     0    NOT USED
Heat    16                     0    NOT USED
Brood   17                     0    NOT USED
Brood   18                    17    CONFLICT
Heat    19                    17    CONFLICT
Heat    20                    17    CONFLICT
Side Fan01           NO       21    OK
Side Fan02           NO       22    OK
Side Fan03           NO       23    OK
Side Fan04           NO       24    OK
Side Fan05           NO       25    OK
Side Fan06           NO       26    OK
Side Fan07           NO        0    NOT USED
Side Fan08           NO        0    NOT USED
Side Fan09           NO        0    NOT USED
Side Fan10           NO        0    NOT USED
Tunl Fan01           NO       31    OK
Tunl Fan02           NO       32    OK
Tunl Fan03           NO       33    OK
Tunl Fan04           NO       34    OK
Tunl Fan05           NO       35    OK
Tunl Fan06           NO       36    OK
Tunl Fan07           NO       37    OK
Tunl Fan08           NO       38    OK
Tunl Fan09           NO        0    NOT USED
Tunl Fan10           NO        0    NOT USED
Tunl Fan11           NO        0    NOT USED
Tunl Fan12           NO        0    NOT USED
Tunl Fan13           NO        0    NOT USED
Tunl Fan14           NO        0    NOT USED
Tunl Fan15           NO        0    NOT USED
Tunl Fan16           NO        0    NOT USED
Tunl Fan17           NO        0    NOT USED
Tunl Fan18           NO        0    NOT USED
Tunl Fan19           NO        0    NOT USED
Tunl Fan20           NO        0    NOT USED
Stir Fan01           NO        0    NOT AVAIL
Stir Fan02           NO        0    NOT AVAIL
Stir Fan03           NO        0    NOT AVAIL
Stir Fan04           NO        0    NOT AVAIL
```

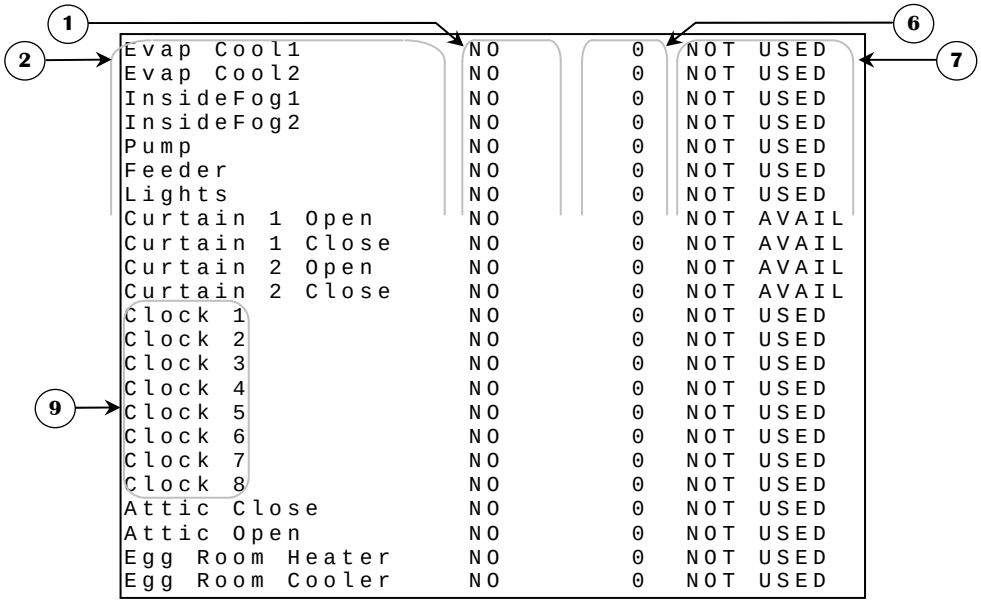

1. This column is used to set the respective output's relay on normally open (NO) or normally close (NC). The respective parameter reflects the corresponding output only if this output's status is "OK", otherwise the last normally open/close valid settings will be used.

2. This column is the output list. Every output of the control is in this list.

3. These parameters are used to select either a heater output or a brooder output.

4. These parameters are used to associate a number to each heater or a brooder output. Any number can be assigned to any of these outputs. Each heat/brood number can be adjusted from 1 to 20.

5. This parameter allows the testing of all relays. By pressing the SELECT button, all relays will shut off. The user will be able to activate the relays only by placing the cursor on a relay. The user also has the possibility to change the relay that is highlighted. The relay corresponding to the new value will then be the one activated. To cancel or finish this test, the user has to go back on the TEST button and press SELECT or change screens. If *TEST* is displayed, this means the test mode is being used. If TEST is displayed, this means the relays operate normally.

6. This column is used to set the respective output on the desired relay. An output can be assigned to any relay from 1 to 48. Adjusting this parameter to 0 deactivates the associated output.

7. This column indicates the status of the output on the relay. If the relay is ok, message "OK" will be shown. If there are 2 outputs on the same relay, the message "CONFLICT" will appear beside the conflicting relays. If output relay is 0, the message "NOT USED" will appear meaning that this output has no relay attached to it. If message is "NOT AVAIL", it means the output or outputs are deactivated and no relay can be assigned to them. If message is "CHOOSE OP" or "CHOOSE CL", it means that another output linked to this output must be set to a valid relay.

8. This parameter is used to select the name of the output. This particular output can be named “Tunl Fan20” or “Tunl Curt1”.

9. These parameters are used to select the name of the respective clock output. Each output can have a unique numbered clock name (Clock 1, Clock 2…) or one of the assigned names. The first six output names can be Hen Feed, Water, CC Light or Fill Sys. The last two output names can be Rooster D or Rooter R.

SUB SCREEN **12.7** **STIR FANS**

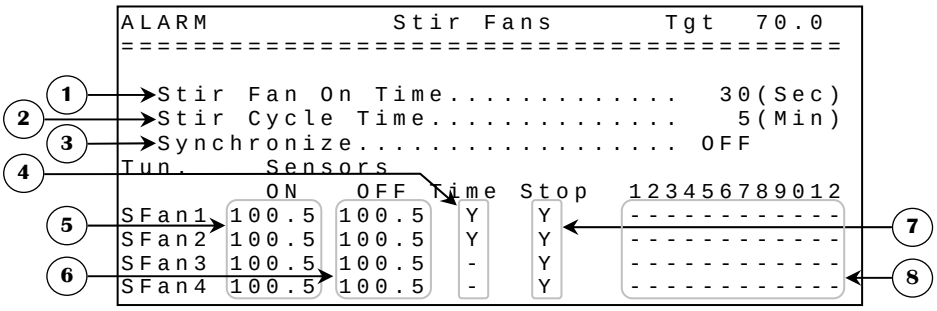

1. This parameter is used to establish the ON time portion of the stir fan timer. The ON time is adjusted in 1-second increments from 2 seconds to 900 seconds.

2. This parameter is used to calculate the OFF time portion of the stir fan timer. The OFF time is equal to `STIR CYCLE TIME - STIR FAN ON TIME`. This parameter is adjusted in 1-minute increments from 1 minute to 15 minutes.

3. This parameter is used to establish the time for which stir fans on timer will activate during the OFF time portion of the minimum ventilation timer. This feature will not activate the stir fans when minimum ventilation timer is not in its OFF portion or is inactive. SYNCHRONIZE TIME is adjusted in 1-second increments from OFF, 1 second to a maximum of 900 seconds.

4. These parameters are used to establish if the respective stir fan will run on a timer according to `STIR FAN ON TIME` and `STIR CYCLE TIME` parameters. If one of these parameters is not on "Y", the respective stir fan will run only on temperature demand or synchronize timer.

5. These parameters are used to set the stir fan set points. The respective stir fan is activated when its respective sensor(s) select average temperature increases to `STIR FAN # ON`. Changing one of these parameters will affect the respective `STIR FAN # OFF` parameter. These parameters are affected by the `TARGET TEMP` parameter and are adjusted in 0.1°F increments from `TARGET TEMP` to `TARGET TEMP` + 40.0°F.

6. These parameters are used to set the stir fan differentials. The respective stir fan deactivates when its respective sensor(s) select average temperature decreases to `STIR FAN # OFF`. These parameters are affected by the respective `STIR FAN # ON` parameter and are adjusted in 0.1°F increments from its respective `STIR FAN # ON` - 10.0°F to its respective `STIR FAN # ON` - 0.5°F.

7. These parameters are used to establish if the respective stir fan will shut off when control goes in tunnel mode. If one of these parameters is set to "Y", the respective stir fan will shut off when control enters tunnel mode. These parameters can be set to "Y" or "N".

8. These parameters are used to set an individual associated temperature to the respective output. The temperatures associated to these stir fans are a combination of the inside probes that are used.

SUB SCREEN 12.8 **CURTAINS**

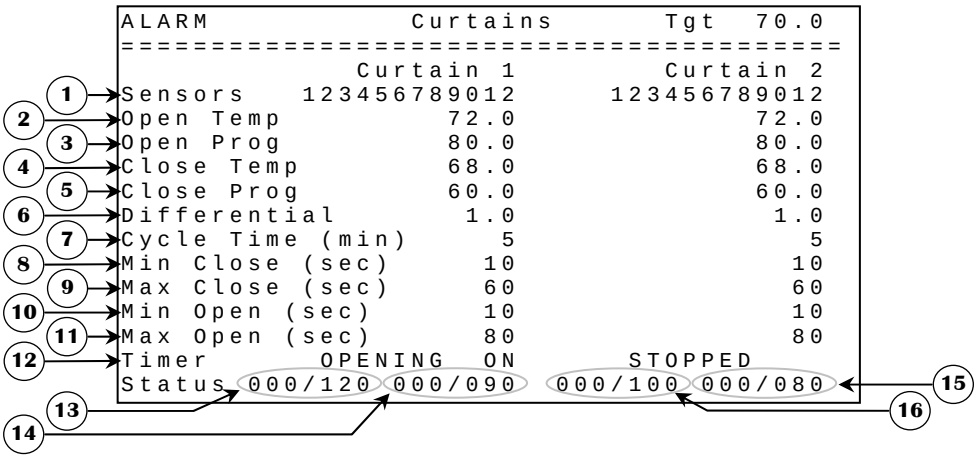

When Curtain 1 is enabled, tunnel inlet will follow curtain 1 demand. This is done at all times except when:

- Control enters tunnel mode and during the DELAY BEFORE tunnel mode.
- The tunnel fan that has the "HELP" transition assigned to it has reached its activation temperature and curtain 1 is not opening.
- Static pressure sensor is equal to or higher than VENT TARGET + DIFF in **STATIC PRESSURE (2)** screen and there is no ventilation inlet enabled. When the curtain 1 opens and there is no longer an opening static pressure demand, tunnel inlet will restart to follow the curtain 1 demand.

1. These parameters are used to set an individual associated temperature to the respective curtain. The temperatures associated to these curtains are a combination of the inside probes that are used.

2. These parameters are used to set the temperature at which the respective curtain will start to open on a timer according to MIN OPEN and CYCLE TIME parameters. When respective sensor(s) select temperature is between CLOSE TEMP and OPEN TEMP, then respective curtain doesn't move. These parameters are relative to the TARGET TEMP and are adjusted in 0.1°F increments from TARGET TEMP - 40.0°F to TARGET TEMP + 40.0°F.

3. These parameters are used to set the temperature at which the respective curtain will open for MAX OPEN. The open time modulates from MIN OPEN, when respective sensor(s) select temperature reaches OPEN TEMP, to MAX OPEN, when respective sensor(s) select temperature reaches OPEN PROG. These parameters are relative to the OPEN TEMP and are adjusted in 0.1°F increments from OPEN TEMP to OPEN TEMP + 40.0°F.

4. These parameters are used to set the temperature at which the respective curtain will start to close on a timer according to MIN CLOSE and CYCLE TIME parameters. When respective sensor(s) select temperature is between CLOSE TEMP and OPEN TEMP then respective curtain doesn't move. These parameters are relative to the TARGET TEMP and are adjusted in 0.1°F increments from TARGET TEMP - 40.0°F to TARGET TEMP + 40.0°F.

5. These parameters are used to set the temperature at which the respective curtain will close for MAX CLOSE. The close time modulates from MIN CLOSE, when respective sensor(s) select temperature reaches CLOSE TEMP, to MAX CLOSE, when respective sensor(s) select temperature reaches OPEN PROG. These parameters are relative to the CLOSE TEMP and are adjusted in 0.1°F increments from CLOSE TEMP to CLOSE TEMP + 40.0°F.

6. These parameters establish the differential for the OPEN TEMP and CLOSE TEMP. This differential is adjusted in 0.1°F from 0.5°F to 10.0°F.

7. These parameters are used to establish the OFF time of the respective curtain. During that time, the curtain will not move. The OFF time is equal to CYCLE TIME – MIN/MAXOPEN/CLOSE. These CYCLETIME parameters are adjusted in 1-minute increments from 1 minute to 15 minutes.

8. These parameters establish the minimum closing time of the respective curtain when respective sensor(s) select temperature has reached CLOSE TEMP. These MIN CLOSE parameters are adjusted in 1-second increments from 2 seconds to 900 seconds.

9. These parameters establish the maximum closing time of the respective curtain when respective sensor(s) select temperature has reached CLOSE PROG. These MAX CLOSE parameters are adjusted in 1-second increments from 2 seconds to 900 seconds.

10. These parameters establish the minimum opening time of the respective curtain when respective sensor(s) select temperature has reached OPEN TEMP. These MIN OPEN parameters are adjusted in 1-second increments from 2 seconds to 900 seconds.

11. These parameters establish the maximum opening time of the respective curtain when respective sensor(s) select temperature has reached OPEN PROG. These MAX OPEN parameters are adjusted in 1-second increments from 2 seconds to 900 seconds.

12. These parameters indicate the respective status of the curtain; "OPENING ON", "OPENING OFF", "CLOSING ON", "CLOSING OFF", "STOPPED", "CONT OPENING" when exiting tunnel mode and "CONT CLOSING" while in tunnel mode.

13. This parameter displays the time elapsed since the beginning of the ON portion of the curtain 1 timer that is either opening or closing. Curtain 1 movement status is shown on top of this parameter. If curtain 1 is opening or closing continuously, this parameter will display "---".

14. This parameter displays the time elapsed since the beginning of the OFF portion of the curtain 1 timer that is either opening or closing. Curtain 1 movement status is shown on top of this parameter. If curtain 1 is opening or closing continuously, this parameter will display "---".

15. This parameter displays the time elapsed since the beginning of the OFF portion of the curtain 2 timer that is either opening or closing. Curtain 2 movement status is shown on top of this parameter. If curtain 2 is opening or closing continuously, this parameter will display “---”.

16. This parameter displays the time elapsed since the beginning of the ON portion of the curtain 2 timer that is either opening or closing. Curtain 2 movement status is shown on top of this parameter. If curtain 2 is opening or closing continuously, this parameter will display “---”.

SUB SCREEN **12.9** **EGG ROOM**

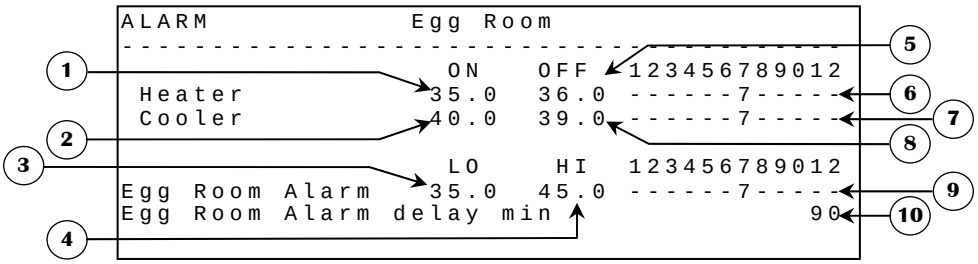

Some parameters may not appear if their corresponding option is not activated. To verify these options, refer to the **SYSTEM CONFIGURATION (12.5)** and **OUTPUT CONFIGURATION (12.6)** screens.

1. This parameter is used to set the temperature at which the egg room heater will activate. When the temperature of the selected probes is at or below this value, the egg room heater will turn on. This parameter is adjusted in 0.1°F increments from 0.0°F to 120.0°F.

2. This parameter is used to set the temperature at which the egg room cooler will activate. When the temperature of the selected probes is at or above this value, the egg room cooler will turn on. This parameter is adjusted in 0.1°F increments from 0.0°F to 120.0°F.

3. This parameter is used to set the temperature at which an egg room low temperature alarm will occur. When the temperature of the selected probes is below this value throughout the EGG ROOM ALARM DELAY, the egg room low temperature alarm will activate. This parameter is adjusted in 0.1°F increments from 0.0°F to 120.0°F.

4. This parameter is used to set the temperature at which an egg room high temperature alarm will occur. When the temperature of the selected probes is above this value throughout the EGG ROOM ALARM DELAY, the egg room high temperature alarm will activate. This parameter is adjusted in 0.1°F increments from 0.0°F to 120.0°F.

5. This parameter is used to set the temperature at which the egg room heater will deactivate. When the temperature of the selected probes is at or above this value, the egg room heater will turn off. This parameter is adjusted in 0.1°F increments from EGG HEATER ON + 0.3°F to EGG HEATER ON + 10.0°F.

6. These parameters are used to set an individual associated temperature to the egg room heater. The temperature associated to the egg room heater are a combination of the inside probes that are used.

7. These parameters are used to set an individual associated temperature to the egg room cooler. The temperature associated to the egg room cooler are a combination of the inside probes that are used.

8. This parameter is used to set the temperature at which the egg room cooler will deactivate. When the temperature of the selected probes is at or below this value, the egg room cooler will turn off. This parameter is adjusted in 0.1°F increments from EGG HEATER ON + 0.3°F to EGG HEATER ON + 10.0°F.

9. These parameters are used to set an individual associated temperature to the egg room alarm. The temperature associated to the egg room cooler are a combination of the inside probes that are used.

10. This parameter is used to set the amount of time for which the temperature selected for the egg room alarm must be outside the high and low limits before activating the alarm. This parameter is adjusted in 1-minute increments from 1 minute to 90 minutes.

Continuous Alarm Message List

These alarms will activate the alarm relay and the ALARM message will appear when the condition is present and when the situation is corrected. The alarm entry must be acknowledged and cleared to deactivate the alarm relay and remove the ALARM message.

Messages	Causes
Static Press high	- Static pressure probe is above HI ALARM SP for more than the HI ALARM DELAY.
Static Press low	- Static pressure probe is below LO ALARM SP for more than the LO ALARM DELAY. If the ALM.REL parameter is set to OFF, the alarm relay will not be activated and the ALARM message will be replaced by the ALARM message.
Temp Probe # Defect	- Temperature probe # is defective (open / short circuit). - Temperature probe # is missing/unplugged and the INSIDE PROBES OPTION setting in **SYSTEM CONFIGURATION (12.5)** screen is above this probe #. (Corresponding probe has to be alarmed to get this message)
Breaker Probe Defect	- Breaker probe is defective (open / short circuit). - Breaker probe is missing/unplugged and the BREAKER PROBE OPTION in **SYSTEM CONFIGURATION (12.5)** screen is set to "Y".
Water # Defect	- The number of gallons counted in 1 minute by the respective water counter is above ALARM WATER.
Feeder # Defect	- The respective feeder has been activated for more than ALARM FEED TIME without interruption.
Humidity PRB Not Resp	- Humidity probe is defective (open / short circuit). - Humidity probe is missing/unplugged and the HUMIDITY OPTION in **SYSTEM CONFIGURATION (12.5)** screen is set to "Y". - Communication board is defective (open / short circuit or unplugged).
Error Code 2-5	- If one or more of these error codes appear, contact your distributor.

Situational Alarm Message List

These alarms will activate the alarm relay and the ALARM message will appear when the condition is present. When the situation is corrected, the alarm relay will deactivate and the ALARM message will appear. The alarm entry must be acknowledged and cleared to remove the ALARM message.

Temperature High	- Average temperature is above TEMPERATURE ALARM HI while in ventilation mode. - Average temperature is above TEMPERATURE IN TUNNEL MODE ALARM HI while in tunnel mode.
Temperature Low	- Average temperature is below TEMPERATURE ALARM LO.
Temp Probe # High	- Temperature probe # is above TEMPERATURE ALARM HI while in ventilation mode. - Average temperature is above TEMPERATURE IN TUNNEL MODE ALARM HI while in tunnel mode. (Corresponding probe has to be alarmed to get this message)
Temp Probe # Low	- Temperature probe # is below TEMPERATURE ALARM LO. (Corresponding probe has to be alarmed to get this message)
Egg Room Temp High	- Egg room temperature is above EGG ROOM ALARM HI for more than EGG ROOM ALARM DELAY.
Egg Room Temp Low	- Egg room temperature is below EGG ROOM ALARM LO for more than EGG ROOM ALARM DELAY.
IndPrb # Excd Limits	- Temperature probe # is above INDIVIDUAL PROBE HI. - Temperature probe # is below INDIVIDUAL PROBE LO.
Breaker Temp High	- Breaker probe is above BREAKER PROBE ALARM.
Humidity High	- Humidity is above the ALARM HUMIDITY HI.
Humidity Low	- Humidity is below the ALARM HUMIDITY LO.
Error Code 1	- The system has rebooted 5 times within a 3-minute period or 10 times within a 15-minute period. This situation will be considered resolved if system does not reboot for 15 minutes. If this situation persists, contact your distributor.
Problem Assigned Prbs	- An activated output or the average temperature has no probes assigned, which means it will never operate properly according to temperature.
Error Code 6	- The MCHIP has remained in the socket for more than 5 minutes.

Continuous Warning Message List These alarms will display the WARNING message when the condition is present and when the situation is corrected. The alarm entry must be acknowledged and cleared to remove the WARNING message.	
Power Failure	- A power failure or a control reset has occurred.
PRB Not Alarmed	- Configuration uses a probe that is not included in PROBE ALARM in **PROBE CONFIGURATION (12.2)** screen.
Situational Warning Message List These alarms will display the WARNING message when the condition is present. The WARNING message will disappear when the situation is corrected.	
Comm. Problem Scale #	- An activated WSM-1 module has not communicated with the AVS-2248 controller for a 5-minute period.

Outputs' Reaction to Different Reset Conditions

Here is how the output will react according to different situations:

1- Power ON
When the system is powered ON, the relays and the 0-10V output will be shut off. The configuration will decide when the outputs have to be activated.

2- Reset button has been pushed for less than 1 second
If the user pushes the reset button for less than 1 second, the relays and the 0-10V output will keep their status as before the reset has been pressed.

3- Reset button has been pushed for more than 1 second
If the user pushes the reset button for more than 1 second, the relays will be deactivated. As soon as the user releases the reset button, the relays will revert their status as before the button was pushed. The 0-10V output will keep its state at all times (even after the 1 second).

4- Microprocessor stops operating
This case is treated as the reset button has been pressed for more than 1 second. The relays shut off and the 0-10V output will keep its state.

5- Configuration is corrupted
Even if the configuration is corrupted, the system will still try to operate. However, if the configuration detects more than 30 resets within a 5-minute period, the configuration will deactivate all relays (in order to activate the external backup system) while operating the 0-10V output normally. If there are no resets within a 5-minute period, the configuration will reactivate the relays according to their demands. Furthermore, if the first bytes of the configuration are corrupted, the program will immediately deactivate all relays.

Configuration Versions			
Version		**Date**	**Modification**
Configuration	**Min. Proc.**		
C2AVS061101M0	--	11/10/2007	- New.
C2AVS070531M0	--	05/16/2007	- Tunnel Inlet follows curtain 1 in opening when not in tunnel mode. - Tunnel Inlet follows static pressure in minimum ventilation mode when Vent Inlet is not used. - Tunnel Help function cancelled if Vent Inlet is not used or Tunnel Help temperature is greater than Curtain 1 Open Temp. - Tunnel Inlet and curtains open continuously Temp at exit of tunnel mode until temperature drops to Curtain 1 Close.
C2AVS070731M1	--	07/31/2007	- Tunnel help may be cancelled only if curtain 1 is enabled. - Modification on default values. - Add on feed counter and 1 water counter. - Tunnel fan 20 can be changed to tunnel curtain 1. - Feed alarm maximum time changed to 120 minutes. - Humidity high alarm can be set to OFF. - Heater set point maximums changed to `TARGET` + 10.0°. - Add display of processor version used.
C2AVS071130M2	--	11/29/2007	- Two scales' logics and corresponding screens added. - "Stat Press Ramping Outside" logic added. - "High Temp Override" is now relative to the `TARGETTEMP`. - Each Bird Count has now a total of 48 weeks. - A total of 48 output relays are now available. - "`ACK/CLR ALL`" function is now available in **ALARM LIST (11.1)** screen. - "`TUN SHUT OFF`" parameters added for Stir fans. - Open/Close delay is now reset when curtain/inlet are not moving. - `TUNNEL TRANSITION` parameters will no longer be visible/effective when no tunnel mode is possible. - Minor corrections on alarm trigger.
C2AVS071130M2	--	11/29/2007	- Two scales' logics and corresponding screens added.
C2AVS080215M2	--	01/25/2008	- Change on tunnel inlet behavior when curtain 1 is activated. - Curtain timer will display "---" when opening or closing continuously.
C2AVS080704M3	--	07/30/2008	- Add 10 points for the main set point ramping curve. - Add ceiling inlet logic. - Add a load delay (as tunnel fans) on the sidewall fans. - Add a load delay on cooling outputs (evaporative cooling, fogger and pump) after a power failure occurs.

C2AVS090101M4	--	01/30/2009	- Add a display of the actual static pressure target. - Add light ramping logic. - Add skip day logic for clocks 5 and 6. - Heat/Brood numbers are now individually adjustable. - Correction on normally open-normally closed relay management when relay types are changed.
C2AVS090715M4	--	07/14/2009	- Correction on the Open/Close delay when tunnel inlet follows curtain. - The light Suspend/Activate parameter now displays the actual state instead of the action that will be performed. - Tunnel inlet is no longer allowed to close on a high static pressure alarm.
C2AVS091030M4	3	10/20/2009	- Correction on the vent and tunnel inlet status displayed in the House screen. - Add Minimum processor version required in the configuration version table.
C2AVS100226M4	3	02/15/2010	- Correction on temperature ramping above point 10.
C2AVS100319M4	3	03/12/2010	- Correction on light cycle when ON and OFF times are close.
C2AVS100712M4	3	07/13/2010	- Feeder output is stopped when a feeder input alarm occurs.
C2AVS100930M5	3	08/25/2010	- Add MSP drop function. - Add another Add Time function on minimum ventilation timer based to time of day. - Add 5 schedule selections for light periods. - Increase maximum light high time to 900 minutes. - Clock output names can now be changed. - Add an activation period for clocks 5 and 6. - Change on clock 7 and 8 logics. - Add an Egg Room option with two outputs and high/low alarms. - Change ceiling inlet wording for attic inlet. - Add an attic static pressure target. - Add the Vent Only mode in the Attic Vent Select.
C2AVS11101M6	9	10/13/2011	- Change inside static pressure ramping function. - Have one alarm timer for each feeder. - Add wireless communication support.

Required Equipment

1 - Main Board (X1256)
1 - Display Board (X1228)
1 - Sensor & Comm. Board (X1199)
2 - Temperature Probes (2004-10K)

Optional Equipment

10 - Temperature Probes (2004-10K)
1 - Static Pressure Sensor (Setra)
2 - Water Counters
2 - Feeder Counters
2 - WSM Modules
1 - Humidity Probe (RH-1)
1 - PC Com Board (X1202)
1 - CTI-40 Module
1 - RF-IN2

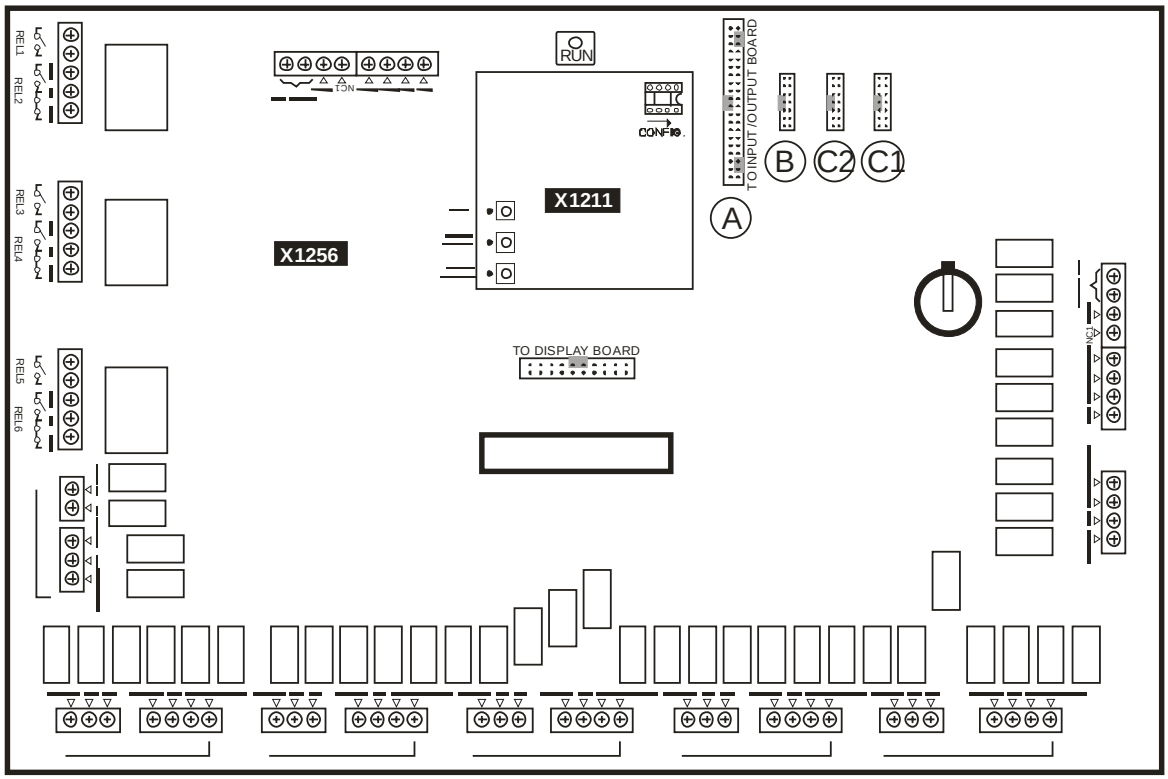
REL1
REL2
REL3
REL4
REL5
REL6
RUN
CONFIG
X1211
X1256
TO INPUT/OUTPUT BOARD
B
C2
C1
A
TO DISPLAY BOARD

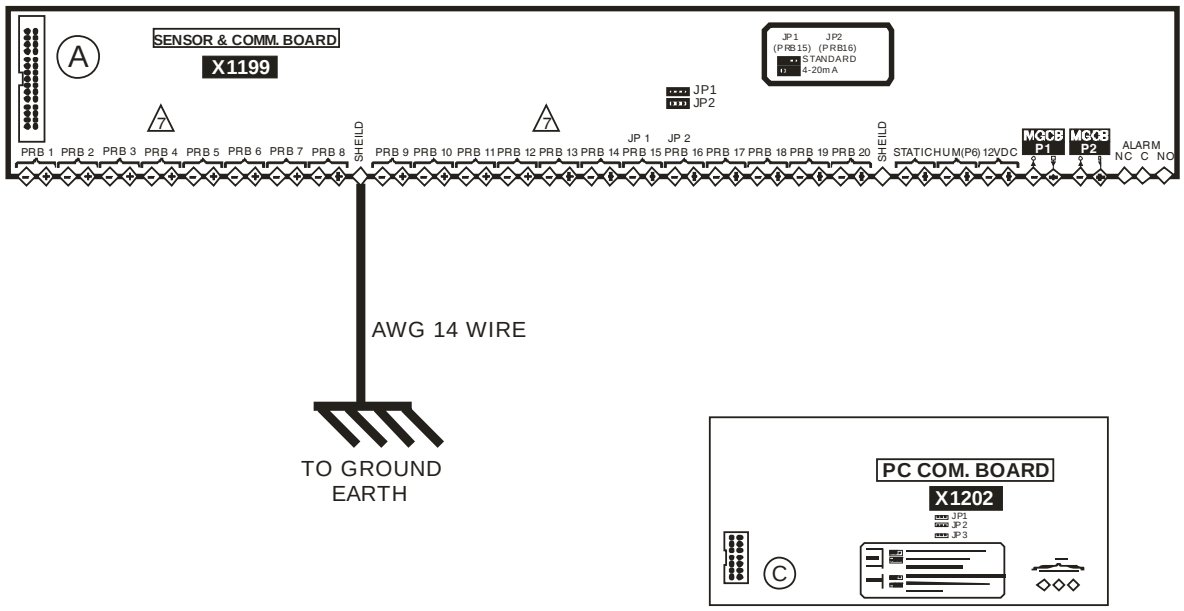
A
SENSOR & COMM. BOARD
X1199
JP1 JP2
(PRB15) (PRB16)
STANDARD
4-20mA
JP1
JP2
PRB 1 PRB 2 PRB 3 PRB 4 PRB 5 PRB 6 PRB 7 PRB 8
SHEILD
PRB 9 PRB 10 PRB 11 PRB 12 PRB 13 PRB 14 PRB 15 PRB 16 PRB 17 PRB 18 PRB 19 PRB 20
JP 1 JP 2
SHEILD
STATICHUM(P6) 12VDC
MCCB P1
MCCB P2
ALARM
NC C NO
AWG 14 WIRE
TO GROUND EARTH
PC COM. BOARD
X1202
JP1
JP2
JP3
C

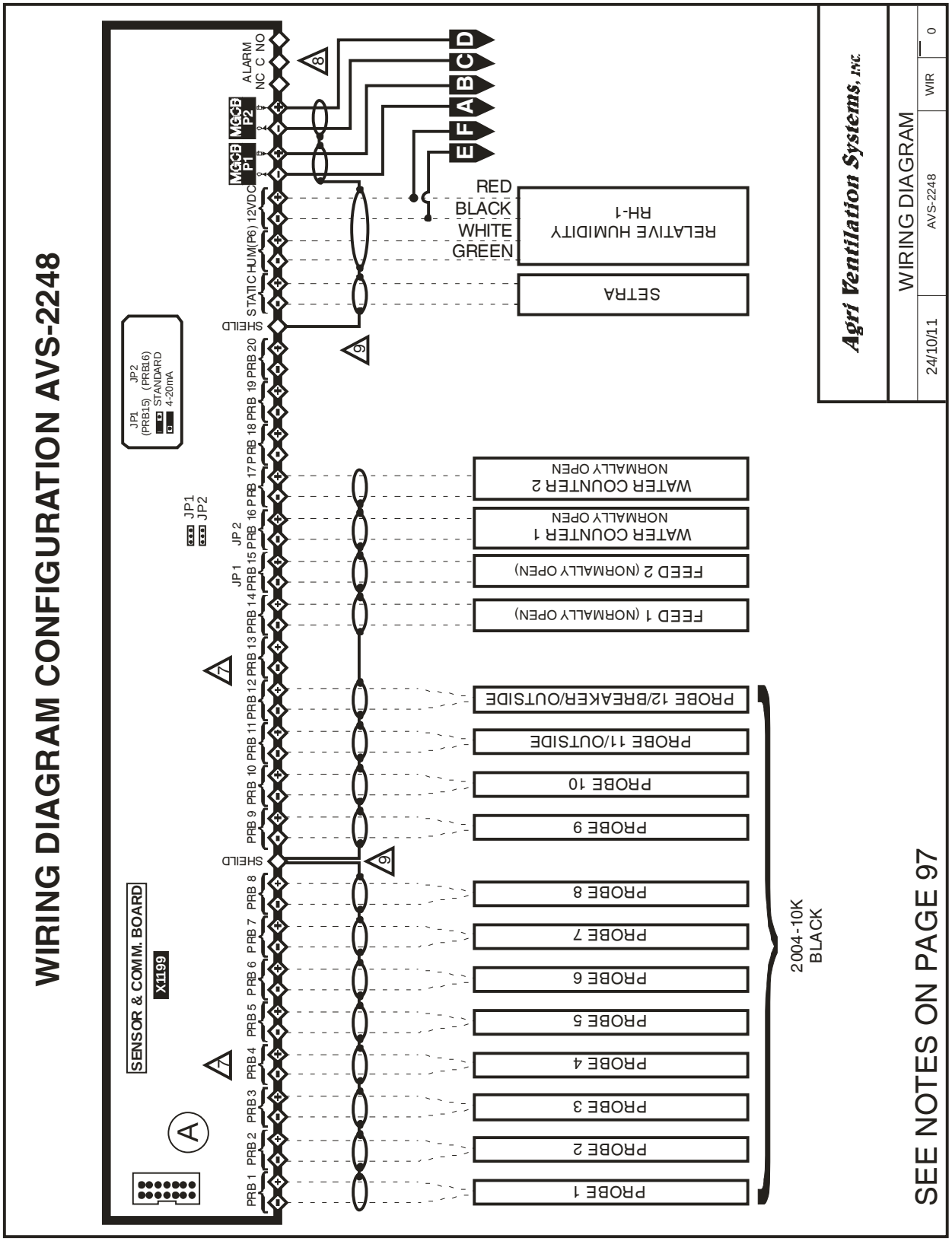
WIRING DIAGRAM CONFIGURATION AVS-2248
SENSOR & COMM. BOARD
X1199
A
PRB 1 PRB 2 PRB 3 PRB 4 PRB 5 PRB 6 PRB 7 PRB 8
SHIELD
PRB 9 PRB 10 PRB 11 PRB 12 PRB 13 PRB 14 PRB 15 PRB 16 PRB 17 PRB 18 PRB 19 PRB 20
SHIELD
STATIC HUM(P6) 12VDC
MGCP P1
MGCP P2
ALARM NC C NO
JP1 JP2
JP1 (PRB15) JP2 (PRB16)
STANDARD
4-20mA
7
8
9
PROBE 1
PROBE 2
PROBE 3
PROBE 4
PROBE 5
PROBE 6
PROBE 7
PROBE 8
PROBE 9
PROBE 10
PROBE 11/OUTSIDE
PROBE 12/BREAKER/OUTSIDE
2004-10K
BLACK
FEED 1 (NORMALLY OPEN)
FEED 2 (NORMALLY OPEN)
WATER COUNTER 1
NORMALLY OPEN
WATER COUNTER 2
NORMALLY OPEN
SETRA
RELATIVE HUMIDITY
RH-1
RED
BLACK
WHITE
GREEN
E F A B C D
Agri Ventilation Systems, INC.
WIRING DIAGRAM
24/10/11
AVS-2248
WIR
0
SEE NOTES ON PAGE 97

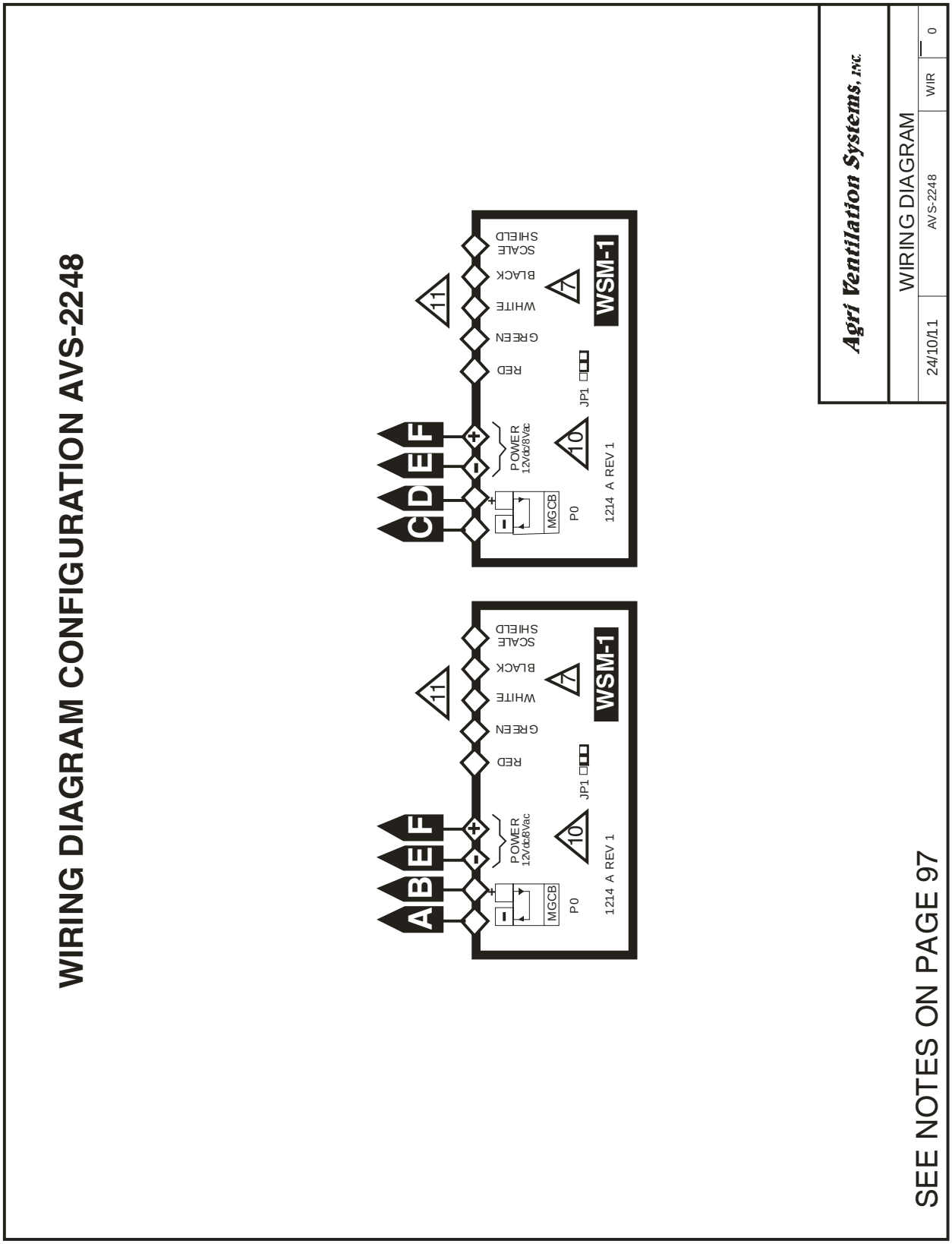
WIRING DIAGRAM CONFIGURATION AVS-2248
A
B
E
F
C
D
E
F
11
SCALE SHIELD
BLACK
WHITE
GREEN
RED
7
WSM-1
JP1
POWER 12Vdc/8Vac
10
1214 A REV 1
P0
MGCB
Agri Ventilation Systems, INC.
WIRING DIAGRAM
24/10/11
AVS-2248
WIR
0
SEE NOTES ON PAGE 97

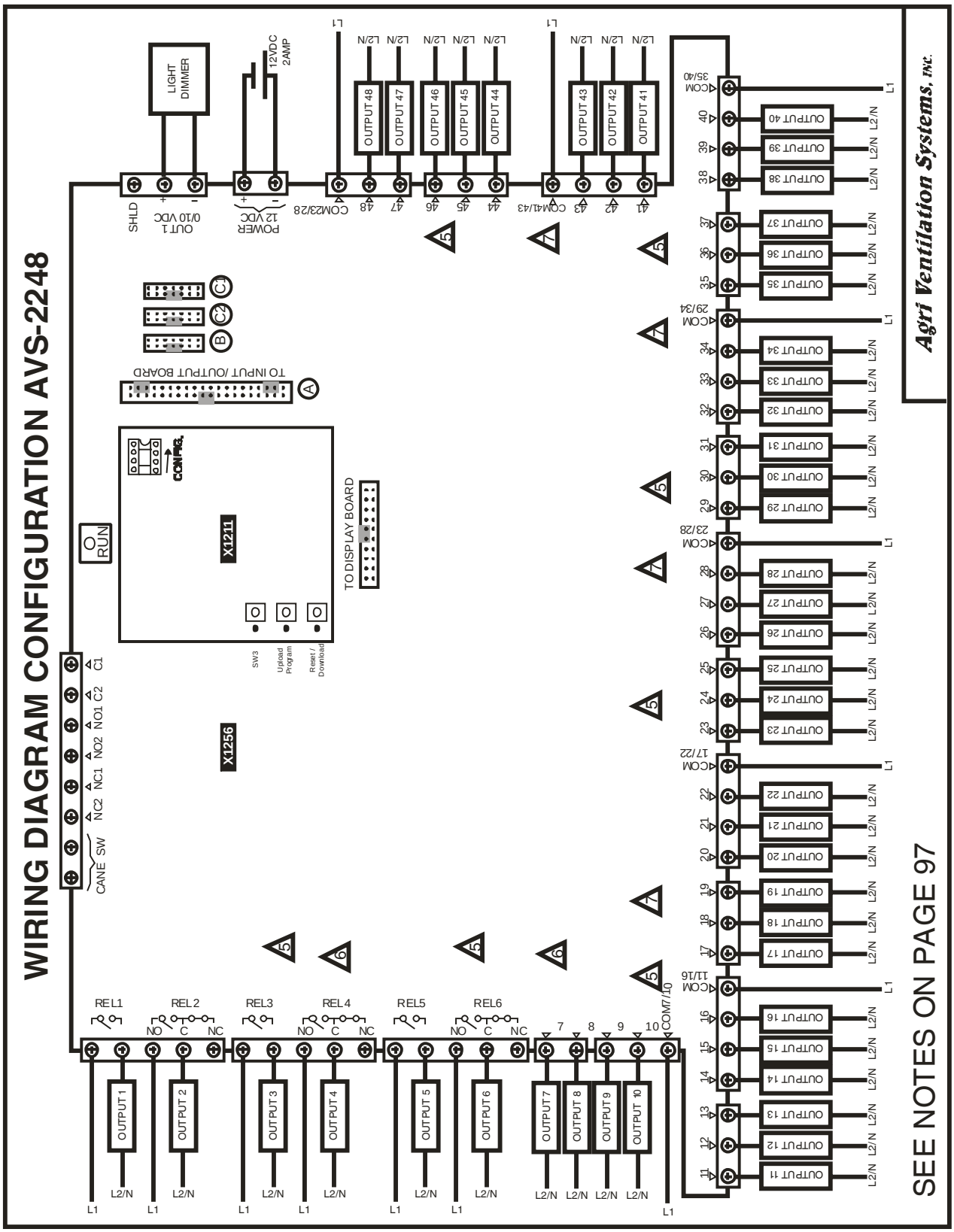
WIRING DIAGRAM CONFIGURATION AVS-2248
Agri Ventilation Systems, inc.
SEE NOTES ON PAGE 97
LIGHT DIMMER
12VDC 2AMP
SHLD
OUT 1 0/10 VDC
POWER 12 VDC
COM23/28
COM41/43
COM7/10
TO INPUT /OUTPUT BOARD
TO DISPLAY BOARD
X1211
X1256
CONFIG.
SW3
Upload Program
Reset / Download
RUN
CANE SW
NC2 NC1 NO2 NO1 C2 C1
REL1
REL2
REL3
REL4
REL5
REL6
NO C NC
OUTPUT 1
OUTPUT 2
OUTPUT 3
OUTPUT 4
OUTPUT 5
OUTPUT 6
OUTPUT 7
OUTPUT 8
OUTPUT 9
OUTPUT 10
OUTPUT 11
OUTPUT 12
OUTPUT 13
OUTPUT 14
OUTPUT 15
OUTPUT 16
OUTPUT 17
OUTPUT 18
OUTPUT 19
OUTPUT 20
OUTPUT 21
OUTPUT 22
OUTPUT 23
OUTPUT 24
OUTPUT 25
OUTPUT 26
OUTPUT 27
OUTPUT 28
OUTPUT 29
OUTPUT 30
OUTPUT 31
OUTPUT 32
OUTPUT 33
OUTPUT 34
OUTPUT 35
OUTPUT 36
OUTPUT 37
OUTPUT 38
OUTPUT 39
OUTPUT 40
OUTPUT 41
OUTPUT 42
OUTPUT 43
OUTPUT 44
OUTPUT 45
OUTPUT 46
OUTPUT 47
OUTPUT 48
COM 11/16
COM 17/22
COM 23/28
COM 29/34
COM 35/40
L1
L2/N

Electrician's notes

1 ---------- (PROBE WIRING) SHIELDED WIRE AWG #22 WITH 16/30 STRANDING, 500ft (150m) MAXIMUM LENGTH (Ex.: DECA 73-310).
For other probe, refer to specific probe manual for appropriate maximum length and wire size or use AWG #22, 500ft (150m) MAXIMUM LENGTH.

2 ———— (COMMUNICATION WIRING) SHIELDED LOW CAPACITANCE WIRE, (Capacitance between conductors @ 1Khz = 24pF/ft), TWISTED PAIR (8 twist/ft), AWG #22, 820ft (250m) MAX LENGTH (Ex.: BELDEN 8761).

3 ▬▬▬ HIGH VOLTAGE WIRE INSTALLED ACCORDING TO LOCAL WIRING CODE.

4 INSTALL LOW VOLTAGE WIRES (PROBES, COMPUTER LINK OR POTENTIOMETER WIRES) AT LEAST 12in. (30cm) AWAY FROM HIGH VOLTAGE WIRES (120/230VAC, 24VDC). ALWAYS CROSS HIGH AND LOW VOLTAGE WIRES AT A 90-DEGREE ANGLE.

5 THE CURRENT SHALL NOT EXCEED 10A AT EACH OUTPUT REL 1-6 AND 4A AT EACH OUTPUT REL 7-48.

6 MAXIMUM 2 WIRES OF SAME SIZE PER BLACK TERMINAL, NO BIGGER THAN AWG #18, NO SMALLER THAN AWG #22 OR 1 WIRE ONLY PER GREEN TERMINAL, NO BIGGER THAN AWG #12, NO SMALLER THAN AWG #28.

7 1 WIRE ONLY PER GREEN TERMINAL. USE WIRE CONNECTOR IF YOU WANT TO CONNECT MORE THAN 1 WIRE, NO BIGGER THAN AWG #12, NO SMALLER THAN AWG #28.

8 CHECK INSTALLATION GUIDE FOR ALARM WIRING.

9 USE SHIELD FOR SHIELDING PURPOSE ONLY. CONNECT THE SHIELD THE INPUT/OUTPUT BOARD (PROBE SHIELD OR COM SHIELD). NEVER LEAVE THE SHIELD UNCONNECTED AT BOTH ENDS. NEVER CONNECT BOTH ENDS OF THE SHIELD TO SHIELD CONNECTOR.

10 A JUMPER MUST BE POSITIONNED ON JP1 IN THE 1-2 POSITION (ID=1).

11 REFER TO THE WSC-1 MANUAL FOR DETAILS ON WIRING.